LBP

www.landboupart.com

LANDBOUPART

COMBINE • ENGINE • TRACTOR • GROUND ENGAGING • PARTS

2020

PRODUCT CATALOGUE

		PAGE NO.
1	**COMBINE - JOHN DEERE AFTERMARKET PARTS**	
	BELTS	
	Belts - 9400,9500,9600	**6**
	Belts - STS - 9560, 9570, 9660, 9670, 9760	**7-8**
	Belts - S Series - S550, S660, S670, S680, S690	**9**
	COMBINE	
	Augers - Distribution	**10**
	Augers - Grain Bin Loading	**10**
	Augers - Lower Clean Grain	**10**
	Augers & Components - Lower Return	**11-12**
	Augers & Components - Top Tailing Return	**12**
	Augers & Tubes - Horizontal Unloading	**12**
	Chaffers - Short Finger Top	**12**
	Clean Grain Elevator Boots and Doors	**12**
	Distribution Auger Pans and Components	**12**
	Distribution Auger Wood Block Bearings	**12**
	Elevator Chain Sprockets	**12-13**
	Elevator Chains	**13**
	Elevator Gearbox	**13-14**
	Feed Reverser Assemblies and Components	**14**
	Feederhouse Chain Sprockets	**14-15**
	Feederhouse Chains	**15**
	Feederhouse Components	**15-16**
	Feederhouse Drums and Shafts	**16**
	Final Drives and Components	**16-17**
	Pulley Assembly	**17**
	Rotor Components	**17**
	Sieves - Lower	**17**
	Spindles	**18**
	Unloading Auger Housing and Components	**18**
	ELECTRICAL	
	Alternators	**18**
	HEADERS	
	CORN	
	Cornhead - Fenders and Snouts	**19**
	Cornhead - Row Unit Components	**19-21**
	WHEAT	
	Cutter Bar Components	**21-22**
	Draper Belts	**22**
	Guards and Cutter Bar Parts	**22**
	Poly Skid Plate Kits	**23**
	Reel Components	**23**
	Row Crop Head Components	**23**
	Sickle Assemblies with Heads	**23**
	Sickle Drives and Components	**24**
	Sickle Knife Heads	**24**
	RADIATORS	
	Radiators	**24**

LANDBOUPART COMBINE • TRACTOR • ENGINE • PARTS

Original manufacturer names, part numbers and descriptions are quoted for reference purposes only.
It is not implied that products of Landboupart are original parts.

		PAGE NO.
	ENGINES	
2	BETA POWER	26-27
3	JOHN DEERE AFTERMARKET PARTS	28-34
4	MELROSE	36-37
5	PERKINS	38-66
	FILTERS	
6	CHALLENGER	68-69
7	JOHN DEERE AFTERMARKET PARTS	70-75
8	LANDINI	76-78
9	MASSEY FERGUSON	80-86

		PAGE NO.
10	**TRACTOR - JOHN DEERE AFTERMARKET PARTS**	88
	Air System	89
	Body	89-90
	Brakes	90-91
	Clutch	91
	Cooling	92-97
	Engine	98
	Front Axle - 2WD	98
	Front Axle - 4WD	99
	Fuel System	99-100
	Gearbox	100
	Hydraulics	101-104
	Instruments	104
	Steering	105-108

LANDBOUPART COMBINE • TRACTOR • ENGINE • PARTS

Original manufacturer names, part numbers and descriptions are quoted for reference purposes only.
It is not implied that products of Landboupart are original parts.

		PAGE NO.
11	**TRACTOR - LANDINI**	**110**
	Air System	**111**
	Body	**112-114**
	Brakes	**114-115**
	Clutch	**115-118**
	Cooling	**118-120**
	Electrical	**121**
	Engine	**121-122**
	Front Axle - 2WD	**123-125**
	Front Axle - 4WD	**125-131**
	Fuel System	**131-132**
	Gearbox	**133-140**
	Hydraulics	**141-147**
	Instruments	**147-150**
	Lights	**150-151**
	Rear Axle	**151-153**
	Steering	**154-156**
	Three Point	**156-157**
	Wheel	**158-159**

		PAGE NO.
12	**TRACTOR - MASSEY FERGUSON**	**160**
	Air System	**162-169**
	Body	**169-183**
	Brakes	**183-190**
	Clutch	**191-199**
	Components	**200**
	Cooling	**200-210**
	Electrical	**210-212**
	Engine	**213**
	Front Axle 2WD	**213-232**
	Fuel System	**232-249**
	Gearbox	**249-284**
	Hydraulics	**285-303**
	Instruments	**304-311**
	Lights	**312-316**
	Rear Axle	**317-325**
	Steering	**326-342**
	Three Point	**342-353**
	Wheel	**353-358**

LANDBOUPART
COMBINE • TRACTOR • ENGINE • PARTS

Original manufacturer names, part numbers and descriptions are quoted for reference purposes only.
It is not implied that products of Landboupart are original parts.

LBP LANDBOUPART

www.landboupart.com

COMBINE • ENGINE • TRACTOR • GROUND ENGAGING • PARTS

COMBINE - JOHN DEERE
AFTERMARKET PARTS

BELTS

BELTS - 9400,9500,9600

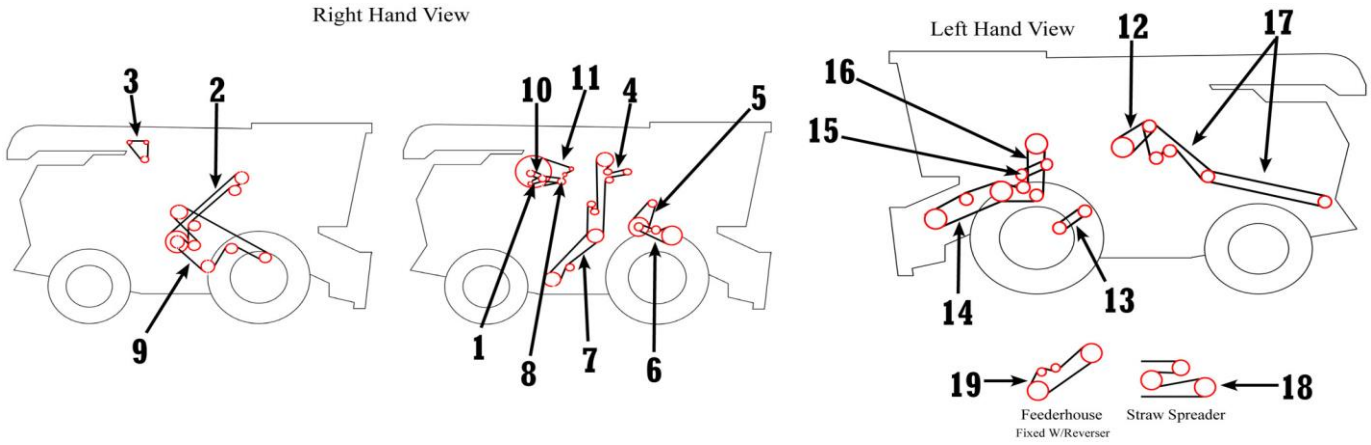

Description	Details	Part Numbers	Models	No. on Picture
Belt - A/C Compressor		H101813	9400 (S/N 640101-650100), 9450	1
Belt - A/C Compressor	Outside Diameter - 56.00"	H80896	9400 (ASN 650101), 9500 (ASN 650201), 9600 (ASN 647501)	1
Belt - Secondary Countershaft		H128010	9400, 9500, 9600	2
Belt - Alternator	Upper	H101813	9400 (ASN 635101), 9500 (ASN 635201), 9600 (ASN 631201)	3
Belt - Clean Grain Elevator		H141167	9400 (ASN 640101), 9500 (ASN 640201)	4
Belt - Cylinder Intermediate Drive	2.50" Wide	H210476	9400, 9500, 9600	5
Belt - Cylinder Drive, Regular Dual & Single Range	Outside Diameter - 111.50"	H115881	9400, 9500, 9600	6
Belt - Tailings Auger & Lower Elevator		N110085	9400, 9500, 9600	7
Belt - Shoe, Straw Walker & Conveyor Augers		H131169	9400, 9500, 9600	9
Belt - Rotary Screen		H145158	9400 (ASN 640506), 9500 (ASN 642579), 9600 (ASN 641717)	11
Belt - Unloading System		AH158880	9400, 9500, 9600	12
Belt - Feederhouse	Variable Speed	H161648	9400, 9600	14
Belt - Header & Reel Pump	Powershift	H151952	9400 (ASN 635101), 9500 (ASN 635201), 9600 (ASN 635301)	16
Belt - Straw Spreader		Z33774	9400	18
Belt - New Feederhouse	w/ Reverser Fixed	H126345	9400, 9500, 9600	19

Original manufacturer names, part numbers and descriptions
are quoted for reference purposes only.
It is not implied that products of Landboupart are original parts.

BELTS - STS - 9560, 9570, 9660, 9670, 9760

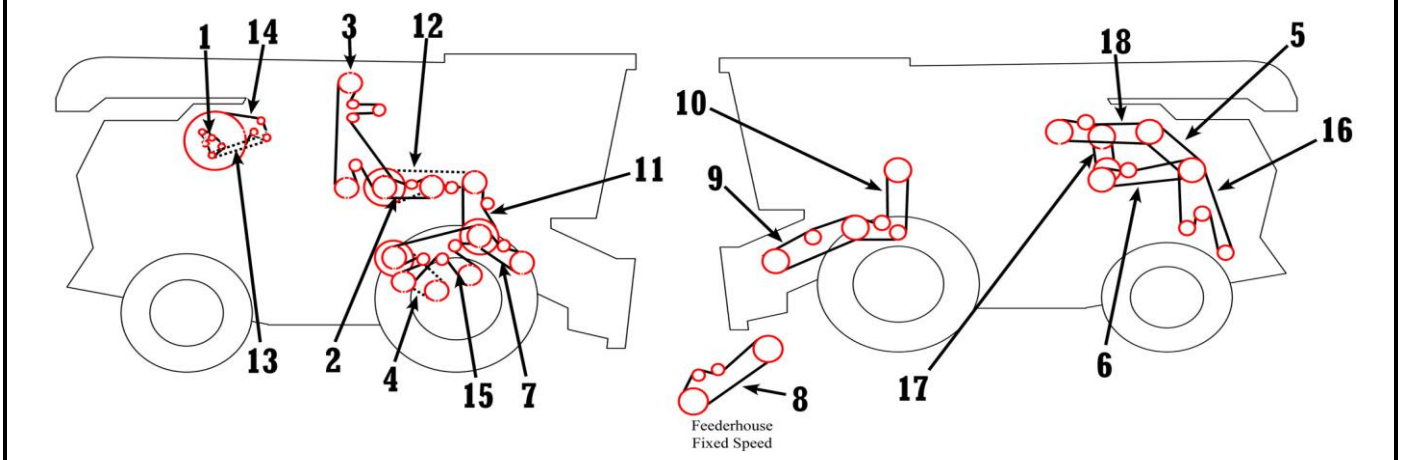

Description	Details	Part Numbers	Models	No. on Picture
Belt - Tailings Auger and Elevator		H154731	9560, 9570, 9660, 9670, 9750, 9760, 9770, 9860, 9870	2
Belt - Clean Grain Elevator		H223230	9770, 9870	3
Belt - Clean Grain Elevator		H206738	9560, 9570, 9650, 9660, 9670, 9750, 9860	3
Belt - Cleaning Fan		H206048	9560, 9660, 9670, 9760, 9770, 9860	4
Belt - Discharge Beater and Chopper	Countershaft	HXE15671	9560, 9570, 9650, 9660, 9670, 9750, 9760, 9770, 9860, 9870	5
Belt - Discharge Beater		H168301	9560, 9570, 9650, 9660, 9670, 9750, 9760, 9770, 9860, 9870	6
Belt - Feed Accelerator	Standard	H204133	9560 (BSN 715301), 9650, 9660 (BSN 715401), 9750, 9760 (BSN 715501), 9860 (BSN 715601)	7
Belt - Feed Accelerator	High Speed	H221733	9660, 9670, 9760, 9770, 9860, 9870 (BSN 730101)	7
Belt - Feed Accelerator	High Speed	H230230	9870 (ASN 730101)	7
Belt - Feederhouse	Fixed Speed - Multi Speed Drive	H229019	9670, 9770, 9870	8
Belt - Feederhouse	Fixed Speed	H126345	9560	8
Belt - Feederhouse	Fixed Speed	H203474	9570, 9660, 9670, 9770, 9860	8
Belt - Feederhouse	Variable Speed - High Cap.	H220911	9660 (High Torque), 9670, 9760 (High Torque), 9770, 9860 (Extra HD)	9
Belt - Feederhouse	Variable Speed - Standard Cap.	H218726	9670, 9770, 9860	9
Belt - Feederhouse	Variable Speed - High Cap.		9560, 9570, 9650, 9660, 9750, 9760	9
Belt - Header and Reel Pump	Standard Cap.	H126345	9560, 9570	10
Belt - Header and Reel Pump	High Cap.	H156541	9650, 9660, 9670 (Vari Speed), 9750, 9760, 9770 (Vari Speed), 9860, 9870	10
Belt - Header and Reel Pump		H229018	9670, 9770, 9870 (Multi Speed)	10
Belt - RH Jackshaft	Front	AH150678	9650, 9660, 9670, 9750, 9760, 9770, 9860, 9870	11
Belt - RH Jackshaft	Rear	H154723	9560, 9570, 9650, 9660, 9670, 9750, 9760, 9770, 9860, 9870	12

Original manufacturer names, part numbers and descriptions
are quoted for reference purposes only.
It is not implied that products of Landboupart are original parts.

BELTS - STS - 9560, 9570, 9660, 9670, 9760 **...CONTINUED**

Description	Details	Part Numbers	Models	No. on Picture
Belt - Rotary Screen Drive	Engine Side	H206807	9650 (ASN 695601), 9660 (BSN 715401), 9750 (ASN 695601), 9760 (BSN 715501), 9860 (BSN 715601)	13
Belt - Rotary Screen Drive	Engine Side	H213353	9570, 9660 (ASN 715401), 9670, 9760 (ASN 715501), 9770, 9860 (ASN 715601), 9870	13
Belt - Rotary Screen Drive	Screen Side	H175628	9650 (ASN 695601), 9660 (BSN 715401), 9750 (ASN 695601), 9760 (BSN 715501), 9860 (BSN 715601)	14
Belt - Rotary Screen Drive	Screen Side	H221273	9570, 9670, 9770, 9870	14
Belt - Rotary Screen Drive	Screen Side	H214241	9660 (ASN 715401), 9760 (ASN 715501), 9860 (ASN 715601)	14
Belt - Straw Chopper		H235564	9560, 9570, 9650 (ASN 700501), 9660, 9670 (CIS), 9750 (ASN 700501), 9760, 9770 (CIS), 9860, 9870 (CIS)	16
Belt - STS Variable Drive		H208431	9770, 9860 (ASN 705798), 9870	17
Belt - Variable Rotor Drive		H221498	9560, 9570, 9650, 9660, 9670, 9750, 9760	17
Belt - Unloading Auger System		AH160080	9560, 9570, 9650, 9660, 9670, 9750, 9760, 9770, 9860, 9870	18

LANDBOUPART
COMBINE • TRACTOR • ENGINE • PARTS

Original manufacturer names, part numbers and descriptions
are quoted for reference purposes only.
It is not implied that products of Landboupart are original parts.

BELTS - S Series - S550, S660, S670, S680, S690

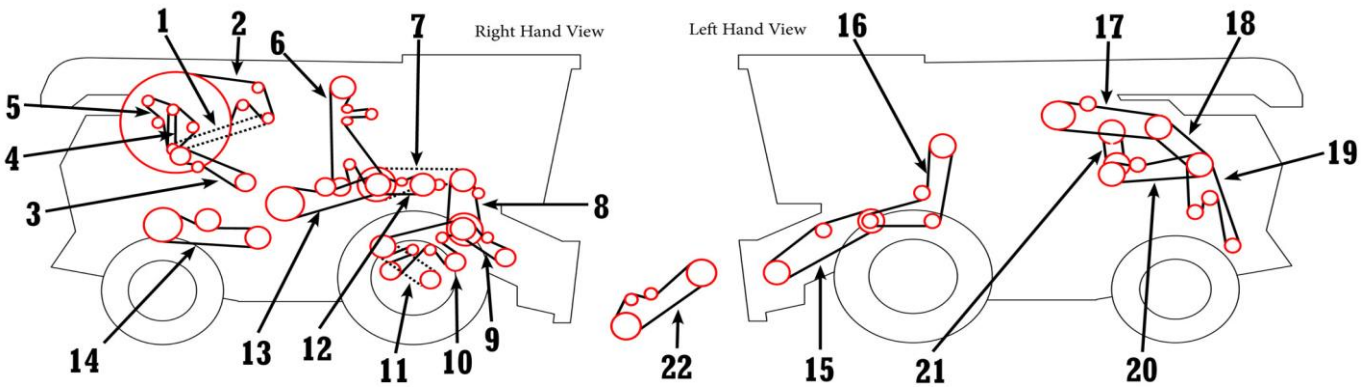

Description	Details	Part Numbers	Models	No. on Picture
Belt - Air Screen Drive	Engine Side	H238867	S660, S670, S670HM, S680, S680HM, S690, S690HM	1
Belt - Vacuum Fan	Upper	HXE24085	S660, S670, S670HM	3
Belt - Vacuum Fan	Lower	HXE24086	S660, S670, S670HM	3
Belt - Fan		HXE22617	S660, S670, S670HM	4
Belt - Alternator		H238822	S660, S670, S670HM	5
Belt - Clean Grain Elevator		H206738	S550, S660	6
Belt - RH Separator Jackshaft	Rear	H154723	S550, S660, S670, S670HM, S680, S680HM, S690, S690HM	7
Belt - Shoe Fan & Conveyor Augers		H175587	S550, S660, S670, S670HM, S680, S680HM, S690, S690HM	10
Belt - Cleaning Fan Drive		HXE15594	S550, S660, S670, S670HM, S680, S680HM, S690, S690HM	11
Belt - Tailings Elevator Drive		H154731	S550, S660, S670, S670HM	12
Belt - Tailings Rethresher Drive		H240895	S680, S680HM, S690, S690HM	13
Belt - Overshot Beater Drive			S670, S670HM, S680, S680HM, S690, S690HM	14
Belt - Feederhouse	Variable Speed, Heavy Duty	H218726	S550, S660	15
Belt - Chopper Drive	Upper	H241230	S660, S670, S670HM, S680, S680HM, S690, S690HM	18
Belt - Chopper Drive	Upper	H241000	S670, S670HM	18
Belt - Chopper Drive	Lower	H241212	S660, S670, S670HM, S680, S680HM, S690, S690HM	19
Belt - Chopper Drive	Lower	H240974	S660, S670, S670HM, S680, S680HM, S690, S690HM	19
Belt - Chopper Drive	Lower	H240972	S660, S670, S670HM, S680, S680HM, S690, S690HM	19
Belt - Discharge Beater Drive		H168301	S550	20
Belt - Discharge Beater Drive		AH236689	S670, S670HM, S680, S680HM, S690, S690HM	20
Belt - Rotor Drive		H221498	S550, S560	21

Original manufacturer names, part numbers and descriptions
are quoted for reference purposes only.
It is not implied that products of Landboupart are original parts.

COMBINE

AUGERS - DISTRIBUTION

Description	Details	Part Numbers	Models	Picture
Distribution Auger	Left Hand Length - 57 1/2"	AH130425 AH169020	9400, 9410, 9500, 9510, 9600, 9610	
	Left Hand	AH146786	9560STS, 9570STS, 9650STS, 9660STS, 9670STS, 9750STS, 9760STS, 9770STS, 9860STS, 9870STS, S550, S660, S670, S680, S690	
	Right Hand Length - 57.50"	AH130424 AH169021	9400, 9410, 9500, 9510, 9600, 9610	
	Right Hand	AH146787	9560STS, 9570STS, 9650STS, 9660STS, 9670STS, 9750STS, 9760STS, 9770STS, 9860STS, 9870STS, S550, S660, S670, S680, S690	

AUGERS - GRAIN BIN LOADING

Description	Details	Part Numbers	Models	Picture
Grain Bin Loading Auger	Extended Wear, Sectional With Bearing Support 10" Flighting Length - 57 1/8"	AH218485	9450, 9550, 9650, 9650STS, 9660STS, 9670STS, 9750STS, 9760STS, 9860STS, S650 Regular Capacity, S660 Regular Capacity, S670 Regular Capacity	
	Extended Wear, Sectional Abrasive Resistant Without Bearing Support Length - 55.00"	AH154330	9450, 9550, 9650, 9650STS, 9660STS, 9750STS, 9760STS	

AUGERS - LOWER CLEAN GRAIN

Description	Details	Part Numbers	Models	Picture
Lower Clean Grain Auger	Extended Wear	AH141577	9400, 9410, 9500, 9510	
	Extended Wear Length: 81.25"	AH162154	9450, 9550, 9560, 9650STS, 9660STS, 9750STS, 9760STS, 9860STS, S670 (Regular Capacity SN 745100-765252)	
Clean Grain Auger Trough Door		AH139388	9400, 9410, 9450, 9500, 9510, 9550, 9650STS, 9660STS, 9670STS, 9750STS, 9760STS, 9770STS, 9860STS, 9870STS	

Original manufacturer names, part numbers and descriptions
are quoted for reference purposes only.
It is not implied that products of Landboupart are original parts.

AUGERS & COMPONENTS - LOWER RETURN

Description	Details	Part Numbers	Models	Picture
Lower Tailing Return Auger	Extended Wear Length - 95.00" Shaft Diameter - 1 3/8"	AH146322	9400, 9410, 9500, 9510	
	Extended Wear	AH147472	9560STS, 9650STS, 9660STS, 9670STS, 9750STS, 9760STS, 9770STS, 9860STS, 9870STS, S660, S670	
Upper and Lower Tailings Shaft		AH130570	9400, 9410, 9450, 9500, 9510, 9550, 9560, 9560STS, 9600, 9610, 9650, 9650STS, 9660	

AUGERS & COMPONENTS - TOP TAILING RETURN

Description	Details	Part Numbers	Models	Picture
Upper Tailings Auger	Length - 28.25" 5.75" Left Hand Flighting	AH209421 AH147529	9570STS, 9650STS, 9660STS, 9670STS, 9750STS, 9760STS, 9770STS, 9860STS, S660, S670, S680, S690	
Upper Tailing Return Drive Sprocket		AH126008	9400, 9410, 9450, 9500, 9510, 9550, 9560, 9560STS, 9600, 9610, 9650, 9650STS, 9660, 9670STS, 9770STS, 9860STS, 9870STS, S550, S660, S670	

AUGERS & TUBES - HORIZONTAL UNLOADING

Description	Details	Part Numbers	Models	Picture
Bearing Flange	Outside Diameter - 2.047" (52mm)	H103264	3300, 4400, 4420, 6601, 6620, 6622, 7200, 7300, 7720, 7721, 8820, 9400, 9500, 9600	

CHAFFERS - SHORT FINGER TOP

Description	Details	Part Numbers	Models	Picture
Chaffer Electrical Adjustment		AXE20455	STS Series	
Short Finger Top Chaffer	51.87" x 63.25", Touchset	AH212239	9650STS, 9660STS, 9670STS, 9750STS, 9770STS, 9860STS, 9870STS, 9880STS	
	Dual Adjust 57.89" x 81.00"	AXE28477	S650 (ASN 765000), S660 (ASN 745100), S670 (ASN 745100), S670 HillMaster (BSN 765000), S680 (ASN 745100), S680 HillMaster (BSN 765000), S690 (ASN 745100), S690 HillMaster (SN 745101-765000)	

CLEAN GRAIN ELEVATOR BOOTS AND DOORS

Description	Details	Part Numbers	Models	Picture
Lower Clean Grain Elevator Boot		AH171008	9450, 9550, 9560, 9560STS, 9650, 9660, 9660STS, 9750STS, 9860STS	
Lower Clean Grain Elevator Door		AH129357	9400, 9410, 9500, 9510	
		AH138426	9450, 9550, 9560, 9560STS, 9570STS, 9650, 9650STS, 9660, 9660STS, 9670STS, 9750STS, 9760STS, 9770STS, 9860STS, 9870STS, S550, S660, S670, S680, S690	

DISTRIBUTION AUGER PANS AND COMPONENTS

Description	Details	Part Numbers	Models	Picture
Bevel Gear		H137215 H75406	3300, 4400, 4420, 6600, 6601, 6602, 6620, 6622, 7700, 7701, 7720, 7721, 8820, 9400, 9410, 9450, 9500, 9510 9550	

DISTRIBUTION AUGER WOOD BLOCK BEARINGS

Description	Details	Part Numbers	Models	Picture
Distribution Auger Wood Block Bearing Set		H142188	9400, 9410, 9500, 9510, 9600, 9610	

ELEVATOR CHAIN SPROCKETS

Description	Details	Part Numbers	Models	Picture
Elevator Chain Sprocket	Forged Carbon Steel 8 Tooth Sprocket with Induction Hardened Teeth Fits 30mm Diameter Shaft	H128576	**Upper Clean Grain** - 9400, 9500, 9510, 9600, 9610 **Upper Return Grain** - 9560STS, 9650STS, 9660STS, 9750STS, 9760STS, 9860STS	
	8 Tooth with Induction Hardened Teeth Forged Carbon Steel Fits 35 mm Diameter Shaft	H133143	**Lower Clean Grain** - 9400, 9410, 9450, 9500, 9510, 9550, 9560, 9560STS, 9600, 9610 9650STS, 9660, 9660STS, 9670STS, 9750STS, 9760STS, 9770STS, 9860STS, 9870STS, S550, S660, S670, S680, S690 **Lower Return Grain** - 9560STS, 9650STS, 9660STS, 9670STS, 9750STS, 9760STS, 9770STS, 9860STS, 9870STS, S550, S660, S670, S680, S690	
	Forged Carbon Steel 8 Tooth Sprocket with Induction Hardened Teeth Fits 1.00" Hex Shaft	H134603	**Upper Return Grain** - 9400, 9410, 9450, 9500, 9510, 9550, 9560, 9600, 9610, 9650, 9660 **Lower Return Grain** - 9400, 9410, 9450, 9500, 9510, 9550, 9600, 9610, 9650	

ELEVATOR CHAIN SPROCKETS **...CONTINUED**

Description	Details	Part Numbers	Models	Picture
Tailings Drive Sprocket Assembly	18 Tooth 50 Chain Hex - 1.00"	AH130572	9400, 9410, 9450, 9500, 9510, 9550, 9560, 9600, 9610, 9650, 9660	
Upper Clean Grain Elevator Chain Sprocket	Forged Carbon Steel 8 Tooth Sprocket with Induction Hardened Teeth Diameter Shaft - 30mm	H164796	9450, 9550, 9560, 9560STS, 9650, 9650STS, 9660STS, 9750STS, 9760STS, 9860STS	

ELEVATOR CHAINS

Description	Details	Part Numbers	Models	Picture
Clean Grain Elevator Chain	Rubber Paddle 144 Links 6.00" x 4 3/8" Rubber Paddles Mounted Every 4th Link	AH162441	9400, 9410, 9500, 9510	
	Rubber Paddle 144 Links 8 3/4" x 4 7/8" Rubber Paddles Every 4th Link	AH162059 AH162058 AXE28559	9450, 9550, 9560, 9560STS, 9570STS, 9650, 9650STS, 9660, 9660STS, 9670STS, 9750STS, 9760STS, 9860STS, 9880STS, S550, S660, S670	
	147 Links - 4 3/4" x 8 7/8" Paddles Every 4th Link CA550HD Chain	AXE28560 AH234790	9670STS, 9770STS, 9870STS, S660, S670 HillMaster, S680, S680 HillMaster, S690 HillMaster (ASN 745101)	
Return Grain Elevator Chain	Rubber Paddle 151 Links 6.00" x 3.00" Rubber Paddles Mounted Every 6th Link	AH131074	9400, 9410, 9450, 9500, 9550, 9600, 9610, 9650	
	Rubber Paddle 113 Links 5 7/8" x 3.00" Rubber Paddles Mounted Every 6th Link	AH148021	9560STS, 9570STS, 9650STS, 9660STS, 9670STS, 9750STS, 9760STS, 9770STS, 9860STS, 9870STS, S550 (SN 745100-764999), S650 (ASN 765000), S660 (SN 745100-785000), S670 (ASN 745100)	

ELEVATOR GEARBOX

Description	Details	Part Numbers	Models	Picture
Bearing		JD7681	9400-9610 STS & S Series	
		JD7689		
Gearbox Input Shaft		CE18445	9400, 9410, 9450, 9500, 9550, 9560, 9560STS, 9570STS, 9600, 9610, 9650, 9650STS, S650, S660, S670, S680	
Gearbox Shaft	Length - 9.67"	H170967	9400, 9410, 9450, 9500, 9510, 9550 (ASN 685956), 9560, 9560STS, 9600, 9610, 9650 (BSN 686232), 9650STS, 9660, 9660STS, 9670STS, 9750STS, 9760STS, 9770STS, 9860STS, 9870STS	

ELEVATOR GEARBOX **...CONTINUED**

Description	Details	Part Numbers	Models	Picture
Remanufactured Grain Elevator Gearbox		DE20100 DE19271	9400, 9410, 9450, 9510, 9550, 9570STS, 9600, 9610, 9650, 9650STS, 9670STS, 9770STS, 9860STS, S650, S660, S670, S680	
Tapered Roller Bearing		AE42998	9400 STS	

FEED REVERSER ASSEMBLIES AND COMPONENTS

Description	Details	Part Numbers	Models	Picture
Needle Roller	186 Required (6 sets of 31)	R33058	9400-STS	
Planetary Gear	3 Required	H168994	6620, 6622, 7720, 8820, 9400, 9410, 9450, 9500, 9510, 9550, 9600, 9610, 9650, 9650STS, 9750STS	
Planetary Input Gear	Has Oil Lube Spots	H166216	6620, 6622, 9400, 9410, 9450, 9500, 9510, 9550, 9600, 9610, 9650, 9650STS, 9750STS	
Planetary Pin	3 Required	R33079	6620, 6622, 7720, 7722 HillSide, 8820, 9400, 9410, 9450, 9500, 9510, 9550, 9560, 9600, 9610, 9650, 9650STS, 9750STS	
Reverser Gearbox Gear	38 Tooth/10	H106073	6620, 6622, 7700, 7722, 8820, 9400, 9410, 9450, 9500, 9510, 9550, 9600, 9610, 9650	
Reverser Pinion Carrier		H168125	6620, 9400, 9410, 9450, 9500, 9510, 9550, 9560, 9600, 9610, 9650, 9650STS	

FEEDERHOUSE CHAIN SPROCKETS

Description	Details	Part Numbers	Models	Picture
Feederhouse Chain Sprocket	Forged Carbon Steel 10 Tooth Sprocket with Induction Hardened Teeth Fits 1.75" Hex Shaft	H118583 H94166	6600, 6620, 6621, 7700, 7720, 7721, 8820, 9400 (ASN 641501), 9500 (ASN 643901), 9600 (ASN 645301)	
Feederhouse Chain Sprocket - Outside	Forged Carbon Steel 10 Tooth Sprocket with Induction Hardened Teeth Fits 2.250" Round Shaft	H159613	9410, 9450, 9510, 9550, 9560, 9610, 9650, 9660	
	13 Tooth - 2,25" Round 2 Required	H159615	9560STS, 9570STS, 9650STS, 9660STS, 9670STS (BSN 730100), 9750STS, 9760STS, 9770STS (BSN 730100), 9860STS, 9870STS (BSN 730100)	

Original manufacturer names, part numbers and descriptions
are quoted for reference purposes only.
It is not implied that products of Landboupart are original parts.

FEEDERHOUSE CHAIN SPROCKETS **...CONTINUED**

Description	Details	Part Numbers	Models	Picture
Feederhouse Chain Sprocket - Inside	Forged Carbon Steel 10 Tooth Sprocket with induction Hardened Teeth Fits 2.250" Round Shaft	H159614	9410, 9450, 9510, 9550, 9560, 9610, 9650, 9660	
	Forged Carbon Steel 13 Tooth Sprocket with Induction Hardened Teeth Fits 2.250" Round Shaft	H159616	9560STS, 9570STS, 9650STS, 9660STS, 9670STS (BSN 730100), 9750STS, 9760STS, 9770STS (BSN 730100), 9860STS, 9870STS (BSN 730100)	

FEEDERHOUSE CHAINS

Description	Details	Part Numbers	Models	Picture
Feederhouse Chain	3 Chain Assembly 101 Links with T-Slats, Wide Spaced, Chrome Pins Slats Mounted Every 2nd and 4th Link on Center Chain	AH138187 AH207777 AH148102 AH203196	9400, 9410, 9450, 9500, 9510, 9550	
	3-Chain Assembly CA557 Heavy Duty Chrome Pins 89 Links with T-Slats Slats mounted every 2nd and 4th link on Center Chain Center-to-Center - 18 3/8"	AH219918	9560STS, 9570STS	
	3-Chain Assembly CA557 Heavy Duty Chrome Pins 89 Links with T-Slats Slats mounted every 2nd and 4th Link on Center Chain Center-to-Center - 23 3/4"	AH217633	9650STS, 9660STS (BSN 720300), 9750STS, 9760STS (BSN 720300), 9860STS (BSN 720500)	
	91 Links, Cast Slats, Wide Spaced, Chrome Pins 23.75" Chain Spacing 3-Chain Assembly	AXE17470 AXE12764 AXE23460	9660STS (ASN 720301), 9670STS (BSN 730100), 9760STS (ASN 720301), 9770STS (BSN 730100), 9860STS (ASN 720301), 9870STS (BSN 730100), S690 (BSN 730100)	

FEEDERHOUSE COMPONENTS

Description	Details	Part Numbers	Models	Picture
Cam	Left Hand Shoe Drive Inner 6mm Keyway Inside Diameter - 1.38"	H234550	9400, 9410, 9450, 9500, 9510, 9550, 9560, 9560STS, 9600, 9610, 9650, 9650STS, 9660, 9660STS, 9750STS, 9760STS, 9860STS	
	Left Hand	H234547		

FEEDERHOUSE COMPONENTS **...CONTINUED**

Description	Details	Part Numbers	Models	Picture
Cam	Right Hand	H234549		
		H234546		
Ball Bearing		JD10018	Combines - 6620, 7720, 8820, 9400, 9410, 9450 (BSN 695100), 9500, 9510, 9550 (BSN 695200), 9560, 9560STS, 9570STS, 9600, 9610, 9650 (BSN 695300), 9650STS (BSN 695400), 9660, 9660STS, 9670STS, 9750STS (BSN 695600), 9760STS, 9770STS, 9860STS, 9870STS Cornheads - 606, 608, 612	
Slip Clutch Sprocket	60 Chain, 34 Tooth, 1.752" Bore Diameter, 0.78" Overall Length	AH116232	9400, 9410, 9450, 9500, 9510, 9550, 9560, 9560STS, 9600, 9610, 9650, 9660	
Sprocket Assembly	Front Driveshaft with Reverser 60 Chain, 15 & 22 Tooth	AH125782	9400, 9410, 9500, 9510, 9600, 9610	

FEEDERHOUSE DRUMS AND SHAFTS

Description	Details	Part Numbers	Models	Picture
Feederhouse Drum		AH142394	9400, 9410, 9450, 9500, 9510, 9550, 9650STS, 9750STS	
		AH220242	9660STS (ASN 720301), 9670STS (BSN 730100), 9760STS (ASN 720401), 9770STS (BSN 730100), 9860STS (ASN 720501), 9870STS (BSN 730100)	
Feederhouse Drum Shaft		H123734	9400, 9410, 9450, 9500, 9510, 9550, 9650STS, 9750STS	

FINAL DRIVES AND COMPONENTS

Description	Details	Part Numbers	Models	Picture
Reman Final Drive Heavy Duty	Right Hand	FD9650R	9650, 9650STS, 9660, 9660STS, 9670STS, 9750STS, 9760STS, 9770STS, 9860STS, 9870STS	
	Left Hand	FD9650L	9650, 9650STS, 9660, 9660STS, 9670STS, 9750STS, 9760STS, 9770STS, 9860STS, 9870STS	
Final Drive Gear	95 Tooth	H167723	9400, 9410, 9450, 9500, 9510, 9550, 9560, 9600, 9610, 9640, 9650STS, 9660, 9660STS, 9680, 9750STS, 9760STS, 9860STS, S660, S670, S680, S690	

Original manufacturer names, part numbers and descriptions
are quoted for reference purposes only.
It is not implied that products of Landboupart are original parts.

FINAL DRIVES AND COMPONENTS **...CONTINUED**

Description	Details	Part Numbers	Models	Picture
Final Drive Pinion Shaft	10 Tooth	H168899	9450, 9550, 9560STS, 9650, 9660	
PINION 10Z DRIVE	10Z	H167722	STS & S Series Combine	

PULLEY ASSEMBLY

Pulley Assembly	Variable Speed	AH219369	STS + S	

ROTOR COMPONENTS

Description	Details	Part Numbers	Models	Picture
Front Rotor Flight Kit	Kit Includes 3 Blades and Mounting Hardware	AH204533	9650STS, 9660STS, 9750STS, 9760STS, 9860STS	
Rear Rotor Flight Kit	Kit Includes 3 Blades and Mounting Hardware	AH204534	9650STS, 9660STS, 9750STS, 9760STS, 9860STS	
Gear		H207015	STS SERIES ROTOR	

SIEVES - LOWER

Description	Details	Part Numbers	Models	Picture
Blunt Finger Bottom Sieve - Touchset	Measures 51.87" x 54.75"	AH212241	9650STS, 9660STS, 9670STS, 9750STS, 9770STS, 9860STS, 9870STS	
Blunt Finger Bottom Sieve		AXE20448	S650 (ASN 765000), S660 (ASN 745100), S670 (ASN 745100), S670 HillMaster (BSN 765000), S680 (ASN 745100), S680 HillMaster (BSN 765000), S690 (ASN 745100), S690 HillMaster (SN 745101-765000)	

SPINDLES

Description	Details	Part Numbers	Models	Picture
Spindle	Right Hand	AH125655 AH173845	9400, 9410, 9500, 9500 SideHill, 9510, 9510 SideHill, 9600, 9610	
Spindle	Left Hand	AH125654 AH173844	9400, 9410, 9500, 9500 SideHill, 9510, 9510 SideHill, 9600, 9610	

UNLOADING AUGER HOUSING AND COMPONENTS

Description	Details	Part Numbers	Models	Picture
Remanufactured Vertical Unloading Gearbox, Lower		X27287	9400, 9410, 9450, 9500, 9510, 9550, 9560STS, 9600, 9610, 9650, 9650STS, 9660, 9660STS, 9750STS, 9760STS, 9860STS	
Remanufactured Unloading Auger Gearbox		AH208345	6620, 7720, 8820, 9400, 9410, 9450, 9500, 9510, 9550, 9600, 9610, 9650, 9650STS, 9660, 9750STS	
Vertical Auger Drive Shaft		H215085 H96169	6620, 6622, 7720, 7721, 8820, 9400, 9410, 9450, 9500, 9510, 9550, 9560, 9560STS, 9570STS, 9600, 9610, 9650, 9650STS, 9660, 9660STS, 9670STS, 9750STS, 9760STS, 9860STS, 9770STS, 9870STS	
Vertical Auger Drive Shaft		H129653	9400, 9410, 9450, 9500, 9510, 9550, 9560, 9560STS, 9570STS, 9600, 9610, 9650, 9650STS, 9660, 9660STS, 9670STS, 9750STS, 9760STS, 9770STS, 9860STS, 9870STS	
Gear	For Vertical Loading Auger	H96294	6620, 6622, 7720, 7721, 8820, 9400, 9410, 9450, 9500, 9510, 9550, 9560, 9560STS, 9570STS, 9600, 9610, 9650, 9650STS, 9660, 9660STS, 9670STS, 9750STS, 9760STS, 9770STS, 9860STS, 9870STS	

ELECTRICAL

ALTERNATORS

Description	Details	Part Numbers	Models	Picture
Alternator	28SI Series Delco 12 Volt 200 Amps Clockwise	AH211398 8600307 8600311	9450, 9550, 9560, 9560STS, 9650, 9650STS, 9660, 9660STS, 9750STS, 9760STS, 9860STS	

HEADERS - CORN

CORNHEAD - FENDERS AND SNOUTS

Description	Details	Part Numbers	Models	Picture
Ear Saver	Rubber	H166582	Inside Row - 40 Series, 90 Series	
Ear Saver	Rubber 2 per Machine on Fender	H148223	90 Series	

CORNHEAD - ROW UNIT COMPONENTS

Description	Details	Part Numbers	Models	Picture
Idler Sprocket	Greaseable	AH101219	Cornheads - 40 Series, 90 Series	
	Non-Greaseable	AN102448	Cornheads - 40 Series, 90 Series	
Corn Gathering Chain Sprocket	8 Tooth Fits 1.00" Hex Bore	H85252	Cornheads - 40 Series, 90 Series	
Cornhead Chain	Chrome Pins	AH208978	Cornheads - 600 Series (BSN 745100)	
Gathering Chain	48 Links, 8 Lug 2.63" Wide Attachment Links	AN102009 AN102009-L	40+90 SERIES CORN HEAD	
Idler Sprocket		AH231386	Cornheads - 600 Series (BSN 745100)	
Drive Sprocket		H233287	Cornheads - 600 Series (BSN 745100)	
Lower Idler Support		H153898	90 Series	
Idler Strap		H144503	40 and 90 Series	
Tensioner Strap	For Gathering Chain	H215634	Cornheads - 606, 608, 612	
Bushing Spring Cover		N104096	40 Series, 90 Series	

Original manufacturer names, part numbers and descriptions
are quoted for reference purposes only.
It is not implied that products of Landboupart are original parts.

CORNHEAD - ROW UNIT COMPONENTS **...CONTINUED**

Description	Details	Part Numbers	Models	Picture
Tension Spring	Lower Idler Support	N61703	Cornheads - 40 Series, 90 Series	
Tension Spring Bolt		08H4219	443, 643, 843, 1243, 444, 644, 844, 1244, 693, 893, 1293, 694, 894, 1294	
Deck Plate	Right Hand Length - 25 3/16"	N102068 N102068C	Cornheads - 40 Series (BSN 466451)	
	Left Hand Length - 25 3/16"	N102069 N102069C		
	Left Hand and Right Hand Length - 27 1/2"	H94952	Cornheads - 40 Series (ASN 466451)	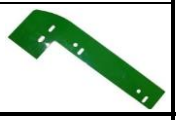
Deck Plate	Left Hand or Right Hand	H154270 H149176	Cornheads - 90 Series	
Deck Plate Cover	Left Hand	AH140825	Cornheads - 90 Series with Hydraulic Adjust	
Deck Plate	Left Hand	AH147773	90 Series with Hydraulic Adjust	
Stalk Roll Barrel	Binocular	AH84853 AN102467 Casting No. H84404	Cornheads - 40 Series, 90 Series	
Stalk Roll Shaft		AH143881	Cornheads - 40 Series, 90 Series	
Stalk Roll Barrel Bearing and Seal Kit	Includes: 2 - Needle Bearings 2 - Ball Bearings 2 - Seals	X27109	Cornheads - 40 Series, 90 Series	
Stalk Roll Seal		AN102266	40 and 90 Series	
Input Gear	17 Tooth	H107779	40 and 90 Series	
Drive Sprocket Shaft Oil Seal		AN71326	40 and 90 Series	
Input Spur Gear Oil Seal		AN102006	40 and 90 Series	

Original manufacturer names, part numbers and descriptions
are quoted for reference purposes only.
It is not implied that products of Landboupart are original parts.

CORNHEAD - ROW UNIT COMPONENTS **...CONTINUED**

Description	Details	Part Numbers	Models	Picture
Drive Shaft	For a Row Unit Gear Case	AH148769	90 Series	
Cornhead Gear Case	Complete	AH209794	40 Series, 90 Series	
Gear Assembly	Stalk Roll Drive	AH146441 AN102004	40 Series, 90 Series	

HEADERS - WHEAT

MAC DON DRAPER HEADER
FD70/75 = CASE IH 2162

Description	Details	Part Numbers	Models	Picture
Finger	4" Single 4" (10 Pack)	224016 AH136689	900 Series	
Knife Head		AH121075	900 Series	
Finger Kit 10 Pack - Headers		AH214868	600 Series	

CUTTER BAR COMPONENTS

Description	Details	Part Numbers	Models	Picture
Knife Section	3" Fine	H136807 H136807C H207929	200, 900, 900R, 900F, 900D	
	4" Fine	H153329 H153329C	600F, 600R, 925D, 930D, 936D	
	4" Coarse	H163131 H163131C		

Original manufacturer names, part numbers and descriptions
are quoted for reference purposes only.
It is not implied that products of Landboupart are original parts.

CUTTER BAR COMPONENTS **...CONTINUED**

Description	Details	Part Numbers	Models	Picture
Cutter Bar	25' Course	CUT25CS	600 & 900 Series	
	25' Fine	CUT25FT		
	30' Course	CUT30CS		
	30' Fine	CUT30FT		

DRAPER BELTS

Description	Details	Part Numbers	Models	Picture
Endless Draper Belt	30' Right and Left Hand Overall Dimensions - 39.93" x 430.80"	AXE36429	630FD	
	For 35' or 40' Platform Right and Left Hand Overall Dimensions - 39.96" x 185.40"	AXE35348 AXE22775	Platforms - 635FD* (BSN 784999), 640FD Short** (BSN 784999) *4 Required **2 Required (Outside Belts)	

GUARDS AND CUTTER BAR PARTS

Description	Details	Part Numbers	Models	Picture
Cutterbar Wear Plate		H153157 H141546	Combine Platforms - Quik-Tatch™ Cutting Platforms - 200 Series, 900 Series Draper Platforms - 918, 920	
Knife Guard	2 Long Blunt PointS	H213398 H213398C H229537	Flex Platforms - 600 Series	
Knife Guard	1 Long Blunt Point	H213507 H213507C	Flex Platforms - 600 Series	
Hold Down Clip	High	AH218547	Platforms - 600F, 600FD, 600R, 925D, 930D, 936D	

Original manufacturer names, part numbers and descriptions
are quoted for reference purposes only.
It is not implied that products of Landboupart are original parts.

POLY SKID PLATE KITS

Description	Details	Part Numbers	Models	Picture
Poly Skid Plate Kit	30' Header	CS30JD6	Auger Platforms - 600 Series	
	35' Header	CS35JD6		
	25' Header	CS25JD9	Platforms - 900 Series Heads	
	30' Header	CS30JD9		

REEL COMPONENTS

Description	Details	Part Numbers	Models	Picture
Finger	6" Singles 6" Singles 6" (10 Pack) 6" 130 Pack	224047 AH166489S AH166489 AH166493	Most makes and models	
Cap		H168206	600 Series Header	
Strap		H175436	600 & 900 Series Header	
Screw		H175609	600 & 900 Series Header	

ROW CROP HEAD COMPONENTS

Description	Details	Part Numbers	Models	Picture
Finger Holder		AH171884	Platforms - 200, 900, 900F, 900R Row Crop Heads - 50 Series, 50A Series	
Finger Guide	For Steel Finger	H87044	Platforms - 200 & 900 Series Row Crop Heads - 50 & 50A Series	

SICKLE ASSEMBLIES WITH HEADS

Description	Details	Part Numbers	Models	Picture
Sickle Assembly with Head	25' Coarse	AH121221	Platform - 925	
Sickle Assembly with Head	30' Coarse	AH121087	Platforms - 230, 930	
Splice Kit	Blade Join	JDSPLICEKIT	600 & 900 Series	

SICKLE DRIVES AND COMPONENTS

Description	Details	Part Numbers	Models	Picture

Wobble Box Assembly		AE41481	Auger Platform - 300A Platforms - 200 Series, 900 Series Mower Conditioners - 1600, 1600A Sickle Mower Conditioners - 710, 720, 820	
Wobble Box		DE19785 DE19409	Platforms - 600F, 600R	
Wobble Box	Heavy Duty	AH206402	918, 920, 922, 925, 930	
Wobble Box Repair Kit	Heavy Duty	AE71003	900 Series Rigid & Flex	
Wobble Box Repair Kit		AE57735	900 Series	
Wobble Box Bearings Kit		AE42998	900 Series	
Arm; Wobble Box	Rigid	H136757		
Arm; Wobble Box	Flex	H136758		

SICKLE KNIFE HEADS

Description	Details	Part Numbers	Models	Picture
Sickle Knife Head		AH205916	600 Series JD Platform	
Sickle Knife Head		AH220050	Draper Platform - 900 Series	

RADIATORS

Description	Details	Part Numbers	Models	Picture
Radiator	36 13/16" x 25" x 4" core dimensions, w/ Inline Tubes	AH208052 AH212547 AH168080	9650STS, 9660STS, 9750STS, 9760STS	

LBP LANDBOUPART

www.landboupart.com

COMBINE • ENGINE • TRACTOR • GROUND ENGAGING • PARTS

ENGINE
BETA POWER PARTS

Beta Power						
Landini Landpower						
Description	**Details**	**Part #**	**Q**	**T3 135**	**T3 145**	**T3 165**
Big End Bearing	Standard	3688880M1	6	x	x	x
	.010 (25mm)	4206388M1	6	x	x	x
	.020 (50mm)	4206389M1	6	x	x	x
Bolt	Top	704717A1	6	x	x	x
		707390A1	14	x	x	x
		707391A1		x	x	x
Camshaft		4208161M1	1	x	x	x
Conrod		3688624M1	6	x	x	x
Crankshaft		3688630M1	1	x	x	x
Fan Assembly		3693139M92	1	x		
		3683678M1	1		x	x
Fuel Lift Pump	Pre Lift	707371A1	1	x	x	x
Gasket	Head 1.115mm	704652A1	1	x	x	x
	Head 1.250mm	707379A1	1	x	x	x
	Top Set	4208115M1	1	x	x	x
	Bottom Set	4208116M1	1	x	x	x
Injector		4208173M1	6	x	x	x
Injector Nozzle		4208174M1	6	x	x	x
Main Bearing	Standard	3688637M1	6	x	x	x
	.010 (25mm)	3688638M1	6	x	x	x
	.020 (50mm)	3688639M1	6	x	x	x
Main Thrust	Standard	3688634M1	6	x	x	x
	.010 (25mm)	3688635M1	6	x	x	x
	.020 (50mm)	3688636M1	6	x	x	x
Oil Pump		3688617M1	1	x	x	x
Oil Seal		3688647M1	1	x	x	x
		3688646M1	1	x	x	x
Piston	Standard	4208130M1	6	x	x	x
	0.4	4208156M1	6	x	x	x
Pulley	Tensioner	3689074M1	1	x	x	x
	Idler	3689075M1	1	x	x	x
	Idler	3689076M1	1	x	x	x
Push Rod		704841A1	12	x	x	x
Ring Set	Standard	706290A1	6	x	x	x
	0.4	707354A1	6	x	x	x
Rocker		704810A1	6	x	x	x
		704814A1	6	x	x	x
Screw		3688623M1	12	x	x	x
Sender Unit	Water	705080A1	1	x	x	x
Small End Bush		3688675M1	6	x	x	x
Starter		3691576M91	1	x	x	x
Switch	Oil Pressure	4208240M1	1	x	x	x
Valve		704807A1	6	x	x	x
		704806A1	6	x	x	x
Valve Quarters		704804A1	24	x	x	x
Water Pump		3689073M1	1	x	x	x

LBP LANDBOUPART

www.landboupart.com

COMBINE • ENGINE • TRACTOR • GROUND ENGAGING • PARTS

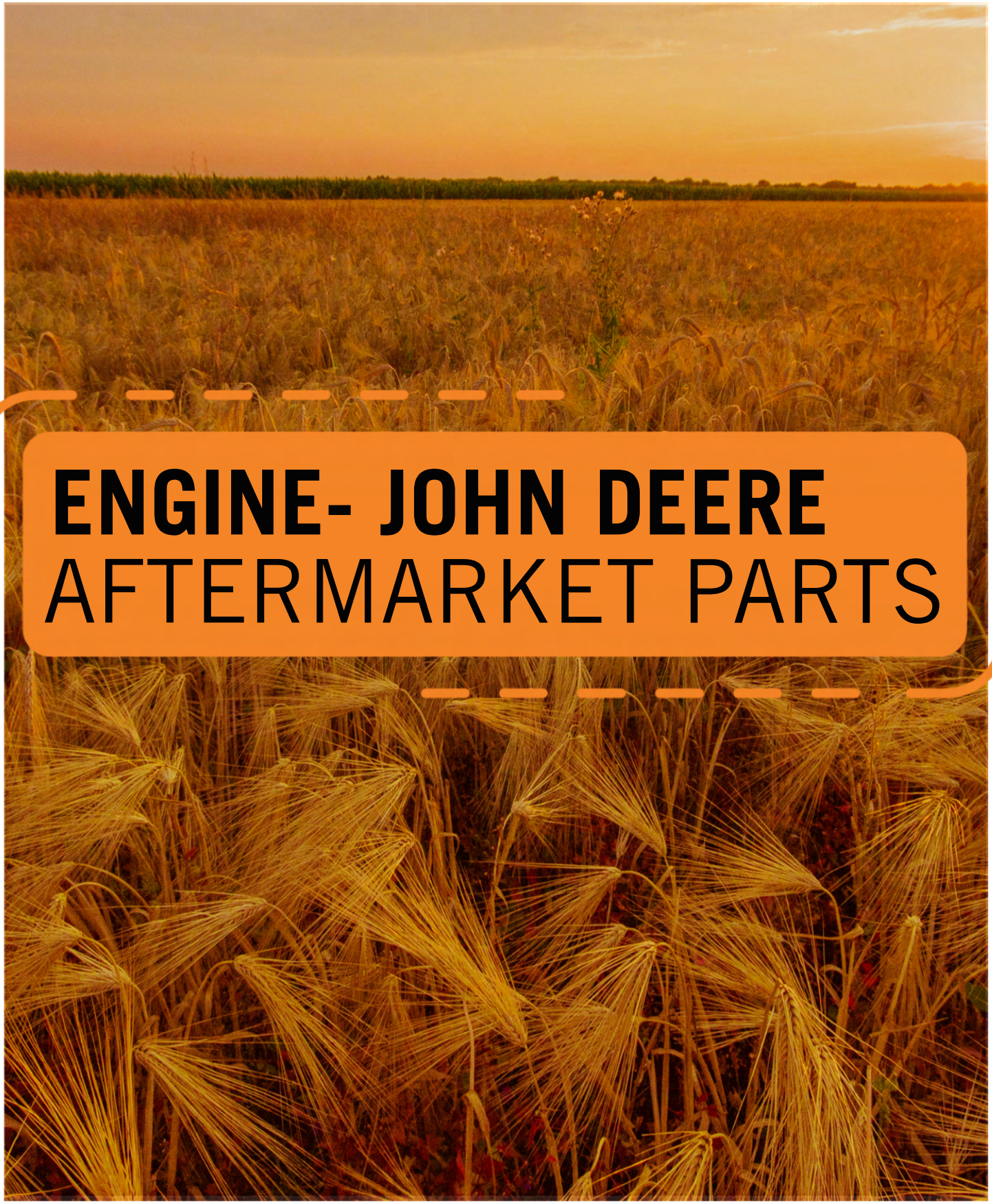

ENGINE- JOHN DEERE
AFTERMARKET PARTS

Description		Part Number	300 SERIES ENGINES																
			3.152D	3.152D	3.164D	3.164D	3.164D	3.179D	4.202_	4.202_	4.219D	4.219D	4.239D	4.239T	6.329D	6.329D	6.329D	6.359D	6.359T
Bore (mm)			98		102			106	98		102		106.5	106.5	102			106.5	106.5
Pin (mm)			30		30		35	35	30		30	35	35	41	30		35	35	41
O-rings on: L = Liner / B = Block			L	B	L	B	B		L	B	B	B			L	B	B		
Serial Breaks			**a**	**b**	**c**	**c**	**d**		**e**	**f**	**g**	**h**			**i**	**i**	**j**		
Balancer Shaft	Bush	**R57160**							X	X	X	X	X	X					
	RH	RE26282							X	X	X	X	X	X					
	LH	RE26283							X	X	X	X	X	X					
Big End Bearings	Std	**RE27348**	X	X	X	X	X	X	X	X	X	X	X	X	X	X	X	X	X
	.010”	**RE27349**	X	X	X	X	X	X	X	X	X	X	X	X	X	X	X	X	X
Cam Follower		**T20073**	X	X	X	X	X	X	X	X	X	X	X	X	X	X	X	X	X
Camshaft		**R82820**							X	X	X	X	X	X					
		R82821													X	X	X	X	X
Conrod		AT18005	X	X	X	X			X	X	X				X	X			
		RE16495					X	X				X	X				X	X	
		RE58347												X					X
Conrod Bolt		**R74194**	X	X	X	X	X		X	X	X	X			X	X	X		
		R80033						X					X	X				X	X
Crankshaft		**AT18030**							X	X	X	X	X	X					
		AT18031	X	X	X	X	X	X											
		AT22562													X	X	X	X	X
		RE20585											X	X					
		RE50979						X											
Cylinder Head Bolt		**R85363**											X	X				X	X
Fuel Lift Pump		**RE42211**	X	X	X	X	X	X	X	X	X	X	X	X	X	X	X	X	X
Gasket Set	Top	**RE38847**							X	X									
		RE38848	X	X															
		RE38850			X	X	X	X											
		RE38851									X	X	X	X					
		RE38852													X	X	X	X	X
Gasket Set	Full	RE38558							X	X									
		RE38570	X	X															
		RE38857									X	X	X	X					
		RE501578			X	X	X	X											
		RE501580													X	X	X	X	X
Injector		**AR89564**	X	X	X	X	X	X	X	X	X	X	X		X	X	X	X	
		AR90024												X					X
Injector	Seal	**R34767** R48000	X	X	X	X	X	X	X	X	X	X	X	X	X	X	X	X	X
Main Bearings	Std	**RE27352**	X	X	X	X	X	X	X	X	X	X	X	X	X	X	X	X	X
	.010”	**RE27353**	X	X	X	X	X	X	X	X	X	X	X	X	X	X	X	X	X
Oil Cooler		**RE31929**	X	X	X	X	X	X	X	X	X	X	X	X	X	X	X	X	X
		RE61767						X											
Oil Pump		**RE52020**	X	X	X	X	X	X	X	X	X	X	X	X	X	X	X	X	X
		RE65580																	X
Oil Seal	Timing Cover	**AR67942**	X	X	X	X	X	X	X	X	X	X	X	X	X	X	X	X	X
Oil Seal	Rear Main	**RE44574**	X	X	X	X	X	X	X	X	X	X	X	X	X	X	X	X	X
Piston	Liner Kit	**AR71591**		X						X									
		AR71593				X					X					X			
		AR90550					X					X					X		
		PLK310			X										X				
		PLK481	X						X										
		RE30250						X					X					X	
		RE33115												X					X

Description		Part Number	300 SERIES ENGINES																
			3.152D	3.152D	3.164D	3.164D	3.164D	3.179D	4.202_	4.202_	4.219D	4.219D	4.239D	4.239T	6.329D	6.329D	6.329D	6.359D	6.359T
Piston		AR87736					X					X					X		
		AR78310			X	X					X				X	X			
		RE19278												X					X
		RE19283						X					X					X	
		T23481	X	X					X	X									
Rings		AR55759			X	X	X				X	X			X	X	X		
		AR55758	X	X					X	X									
		RE66820						X					X	X				X	X
Ring Gear	129T	R28811																X	X
	142T	T20088	X	X	X	X	X	X	X	X	X	X	X	X	X	X	X		X
Sleeve		AR51902	X						X										
		AR51903			X										X				
		R51726						X					X	X				X	X
		T32340		X						X									
		T32343				X	X				X	X				X	X		
Sleeve	O Ring	AR65507						X					X	X				X	X
		AR71617		X						X									
		AR71618				X	X				X	X				X	X		
Small End Bush		R55647					X	X				X	X				X	X	
		R57451												X					X
		T23471	X	X	X	X			X	X	X				X	X			
Thermostat	180°F	AR48675												X				X	X
	180°F	AR70601													X	X	X		
	195°F	AR77411													X	X	X		
	180°F	RE33705	X	X	X	X	X	X	X	X	X	X	X				X		
Thrust Bearings	Std	AT21139	X	X	X	X	X	X	X	X	X	X	X	X	X	X	X	X	X
	.010”	AT21132	X	X	X	X	X	X	X	X	X	X	X	X	X	X	X	X	X
Valve Cap		T20129	X	X	X	X	X	X	X	X	X	X	X	X	X	X	X	X	X
Valve Cotters		T20077	X	X	X	X	X	X	X	X	X	X	X	X	X	X	X	X	X
Valve Exhaust	Std	R79624	X	X	X	X	X	X	X	X	X	X	X	X	X	X	X	X	X
	.003”	R79625	X	X	X	X	X	X	X	X	X	X	X	X	X	X	X	X	X
	.015”	R79626	X	X	X	X	X	X	X	X	X	X	X	X	X	X	X	X	X
Valve Rotator		RE11410	X	X	X	X	X	X	X	X	X	X	X	X	X	X	X	X	X
Valve Spring		R26125	X	X	X	X	X	X	X	X	X	X	X	X	X	X	X	X	X
Valve Insert	Exhaust	R51734	X	X	X	X	X	X	X	X	X	X	X	X	X	X	X	X	X
	Inlet	R73064	X	X	X	X	X	X	X	X	X	X	X	X	X	X	X	X	X
Valve Inlet	Std	R79623	X	X	X	X	X	X	X	X	X	X	X	X	X	X	X	X	X
	.003”	R79628	X	X	X	X	X	X	X	X	X	X	X	X	X	X	X	X	X
	.015”	R79629	X	X	X	X	X	X	X	X	X	X	X	X	X	X	X	X	X
Water Pump		AR97708						X					X	X					
		RE60489						X											
		AT27018			X	X	X				X	X							

SERIAL BREAKS:

a) To 154765
b) From 154766
c) To 179601
d) From 179602
e) To 158257
f) From 158258
g) To 275483
h) From 275484
i) To 277548
j) From 277549

Description		Part Number	400 SERIES ENGINES														
			1	2	3												
			6.404D	6.404D	6.404D	6.404D	6.404D	6.404A	6.404A	6.404T	6.404T	6.466D	6.466A	6.466A	6.466A	6.466T	6.466T
Bore (mm)			108					108		108		116	116			116	
Pin (mm)			38					41		41		41	47			47	
O-rings on: L = Liner / B = Block																	
Serial Breaks			a	a	a	b	c	d	c	d	c		e	g	h	f	i
Big End Bearings	Std	**AR45723**	X	X	X	X	X	X	X	X	X	X					
	Std	**AR73277**											X	X	X	X	X
	.010”	**AR73279**											X	X	X	X	X
	.010”	**AR46396**	X	X	X	X	X	X	X	X	X	X					
Cam Bush		**R46903**	X	X	X	X	X	X	X	X	X	X	X	X	X	X	X
Cam Follower		R26342	X		X												
		R52773		X		X	X	X	X	X	X	X	X	X	X	X	X
Camshaft		AR100386				X	X					X					
		AR100385						X	X	X	X		X	X	X	X	X
Conrod		AR93341												X	X		X
Conrod Bolt		**R66452**	X	X	X	X	X	X	X	X	X	X	X	X	X	X	X
Crankshaft		RE53422	X	X	X	X	X	X	X	X	X	X	X	X	X	X	X
Fuel Lift Pump		AR53567	X	X	X	X	X										
		AR57264							X		X	X					
		RE42211	X	X	X	X	X										
		RE38009										X					
		AR49771	X	X	X	X	X	X		X							
Gasket Set	Top	AR53625	X	X	X												
		AR53630				X											
		AR63940					X										
		AR98851											X	X	X	X	X
		AR63270						X	X	X	X						
		AR100632										X					
Gasket Set	Full	**AR53626**	X	X	X												
		AR98845											X	X	X	X	X
		AR53631				X											
		AR63938					X										
		AR53094						X		X							
		AR100638										X					
		AR63269							X		X						
Injector		AR50781	X	X	X	X	X										
Injector	Seal	**R34767** R48000	X	X	X	X	X										
Main Bearings	Std	**AR49243**	X		X												
	Std	**AR74814**		X		X	X	X	X	X	X	X	X	X	X	X	X
	.010”	**AR49245**	X		X												
	.010”	**AR74816**		X		X	X	X	X	X	X	X	X	X	X	X	X
Oil Cooler		**AR55394**					X			X	X	X	X			X	
		AT25038						X	X				X	X	X	X	X
Oil Pump		**RE60622** **RE507076**												X	X		X

Description		Part Number	400 SERIES ENGINES														
			1	2	3												
			6.404D	6.404D	6.404D	6.404D	6.404D	6.404A	6.404A	6.404T	6.404T	6.466D	6.466A	6.466A	6.466A	6.466T	6.466T
Oil Seal	Timing Cover	**AR49025**	X	X	X	X	X	X	X	X	X	X	X	X	X	X	X
Oil Seal	Rear Main	**RE520036**	X	X	X	X	X	X	X	X	X	X	X	X	X	X	X
Piston	Liner Kit	**RE23173**	X														
		AR72079											X			X	
		AR100960												X			
		AR100646 **RE60282**													X		X
		RE23170		X													
		PLK163			X												
		RE23165				X											
		RE23160					X										
		AR83610										X					
		AR51798 **RE63393**						X		X							
		AR63272							X		X						
Piston		RE23172	X	X													
		AR100616													X		X
		AR100673												X			
		AR93629 **AR93627**											X			X	
		RE23163			X		X										
		RE23168				X											
		AR100442										X					
		AR50624						X		X							
		AR54552							X		X						
Rings		**AR55630**	X	X		X											
		RE48380											X	X	X	X	X
		AR65502			X		X										
		AR87753										X					
		AR51741						X	X	X	X						
Ring Gear	129T	**R28811**	X	X	X	X	X	X	X	X	X	X	X	X	X	X	X
Sleeve		**R32050**	X		X												
		R40615		X		X	X	X	X	X	X						
		AR63060										X	X	X	X	X	X
Sleeve	O Ring	AR40155	X		X												
		AR65507		X		X	X	X	X	X	X						
		AR98850										X	X	X	X	X	X
Small End Bush		**R30939**	X	X	X	X	X										
		R60724											X			X	
		R42173						X	X	X	X	X					
		R74008												X	X		X
Thermostat	180°F	**R36846**	X	X	X	X	X	X		X							
	180°F	**AR48675**							X		X	X	X	X	X	X	X

Original manufacturer names, part numbers and descriptions
are quoted for reference purposes only.
It is not implied that products of Landboupart are original parts.

Description		Part Number	400 SERIES ENGINES														
			1	2	3												
			6.404D	6.404D	6.404D	6.404D	6.404D	6.404A	6.404A	6.404T	6.404T	6.466D	6.466A	6.466A	6.466A	6.466T	6.466T
Thrust Bearings	Std	AR49242	X		X												
	Std	**AR77748**		X		X	X	X	X	X	X	X	X	X	X	X	X
	.010”	AR49238	X		X												
	.010”	**AR77750**		X		X	X	X	X	X	X	X	X	X	X	X	X
Thrust Washer	Std	**AR77747**		X		X	X	X	X	X	X	X	X	X	X	X	X
	.007”	**AR77753**		X		X	X	X	X	X	X	X	X	X	X	X	X
Valve Cap		**T20129**				X	X	X	X	X	X	X	X	X	X	X	X
Valve Cotters		**T20077**				X	X	X	X	X	X	X	X	X	X	X	X
Valve Exhaust	Std	R26123	X	X	X												
	Std	R44175	X	X	X												
	Std	**R50357**							X		X		X	X	X	X	X
	.003”	**R55056**							X		X		X	X	X	X	X
	.015”	**R55058**							X		X		X	X	X	X	X
	Std	**R43679**				X	X	X		X		X					
	.003”	**R43787**				X	X	X		X		X					
	.015”	**R43788**				X	X	X		X		X					
Valve Rotator		**RE11410**				X	X	X	X	X	X	X	X	X	X	X	X
Valve Spring		**R26125**	X	X	X	X	X	X	X	X	X	X	X	X	X	X	X
Valve Insert	Exhaust	R43681	X	X	X	X	X	X		X		X					
	Exhaust	R50356							X		X		X	X	X	X	X
	Inlet	R43680	X	X	X	X	X	X		X		X					
	Inlet	R78702							X		X		X	X	X	X	X
Valve Inlet	Std	R26124	X	X	X												
	Std	R44174	X	X	X												
	Std	**R50358**							X		X		X	X	X	X	X
	.003”	**R55055**							X		X		X	X	X	X	X
	.015”	**R55057**							X		X		X	X	X	X	X
	Std	**R43883**				X	X	X		X		X					
	.003”	**R45003**				X	X	X		X		X					
	.015”	**R45004**				X	X	X		X		X					
Water Pump		AR45332	X	X	X	X	X										
		RE55985										X	X	X	X	X	X
		RE55986										X	X	X	X	X	X
		RE20022											X	X	X	X	X

Original manufacturer names, part numbers and descriptions
are quoted for reference purposes only.
It is not implied that products of Landboupart are original parts.

SERIAL BREAKS:

a) To 214999
b) 215000-335845
c) From 335846
d) To 335845
e) To 233592
f) To 253372
g) 233593-317858
h) From 317859
i) From 253373

NOTES

1 6.404D Original block marked R26070, R33180, R34340, R40890, R40900
2 6.404D Original block marked R40930
3 6.404D Early Power Booster (Original block marked same as no. 1)

Fuel Lift Pump:
AR53567 - To ESN 82801
RE42211 - ESN 82802-422365
AR49771 - From 422366

Valve Exhaust:
R26123 - To ESN 82801
R44175 - ESN 82802-214999

Valve Inlet:
R26124 - To ESN 82801
R44174 - ESN 82802-214999

6.466A/T

Waterpump:
RE55985 - check proper application
RE55986 - check proper application
RE20022 - OEM from ESN 067685

Original manufacturer names, part numbers and descriptions
are quoted for reference purposes only.
It is not implied that products of Landboupart are original parts.

LBP LANDBOUPART

www.landboupart.com

COMBINE • ENGINE • TRACTOR • GROUND ENGAGING • PARTS

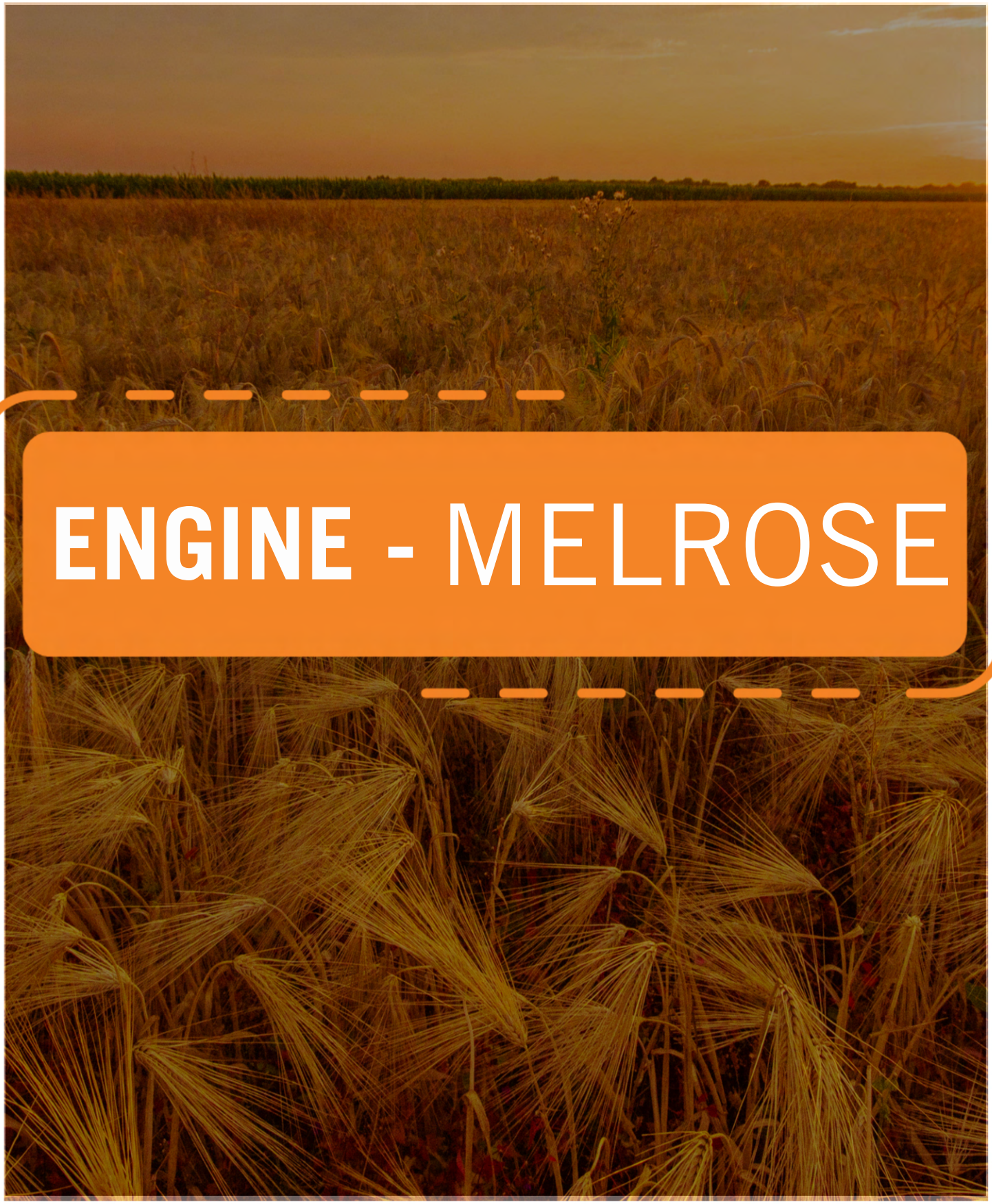

ENGINE - MELROSE

International Melrose							
109.22mm Bore 49mm Pin							
Description	**Details**	**Part #**	**Part #**	**Q**	**DT414**	**DT436**	**DT466**
Big End Bearings 1.181” 30mm	Standard	1823855	681314C3	6	x	x	x
	.010” (.25mm)	1823856	681315C3	6	x	x	x
	.020” (.50mm)	1823857	687382C3	6	x	x	x
	.030” (.75mm)	1823858	681316C3	6	x	x	x
Cam Bush	Set	680117C3		1	x	x	x
Camshaft		1802377		1	x	x	x
Conrod	Bolt	676679C2		12	x	x	x
Gaskets	Top	1817254		1	x	x	x
	Bottom	674399C96		1	x	x	x
	Head	1819547	1342421C2	1	x	x	x
	Tappet Cover	1342828		1	x	x	x
	Sump	671827C4		1	x	x	x
Main Bearings 1.220” 31mm	Standard	1823847	MS1343	1	x	x	x
	.010” (.25mm)	1823848A		1	x	x	x
	.020” (.50mm)	1823849		1	x	x	x
	.030” (.75mm)	1823850		1	x	x	x
Oil Pump		1802666C91		1	x	x	x
Oil Seal With Sleeve	Timing Cover	690437C94		1	x	x	x
	Rear Main	1809964C92		1	x	x	x
O Ring	Kit	680086C1		3	x	x	x
Overhaul Kit	30/31mm Wide Gap	RP851		1			x
		RP865		1	x		
		RP		1		x	
Piston	20mm Height	1817520		6			x
	15mm Height	684253		6		x	
	12mm Height	684251		6	x		
Rings	6mm Wide Oil Ring	1346906C91	687429	6			x
		1346907C91		6			
	Narrow Turbo 6mm	1346908C91	684256	6	x	x	
	Wide Turbo 3mm	1817247		6			x
	Non Turbo 414 436	7684065		6			
Sleeve Kit	46mm 109.22 Elec	31824966		6			x
		1802580		6			x
		1802578C93	684260	6	x		
			684261	6		x	
	Loose	7WS556-B		6	x	x	x
Small End Bush	4.3” Honable	675006C1		6	x	x	x
Valve	Exhaust	676865C4		6	x	x	x
	Inlet	675046C4		6	x	x	x
Valve Guide	To Serial	675439C1		12	x	x	x
Vibration Damper		680275		1	x	x	x
Water Pump		1815538		1			x

LBP LANDBOUPART

www.landboupart.com

COMBINE • ENGINE • TRACTOR • GROUND ENGAGING • PARTS

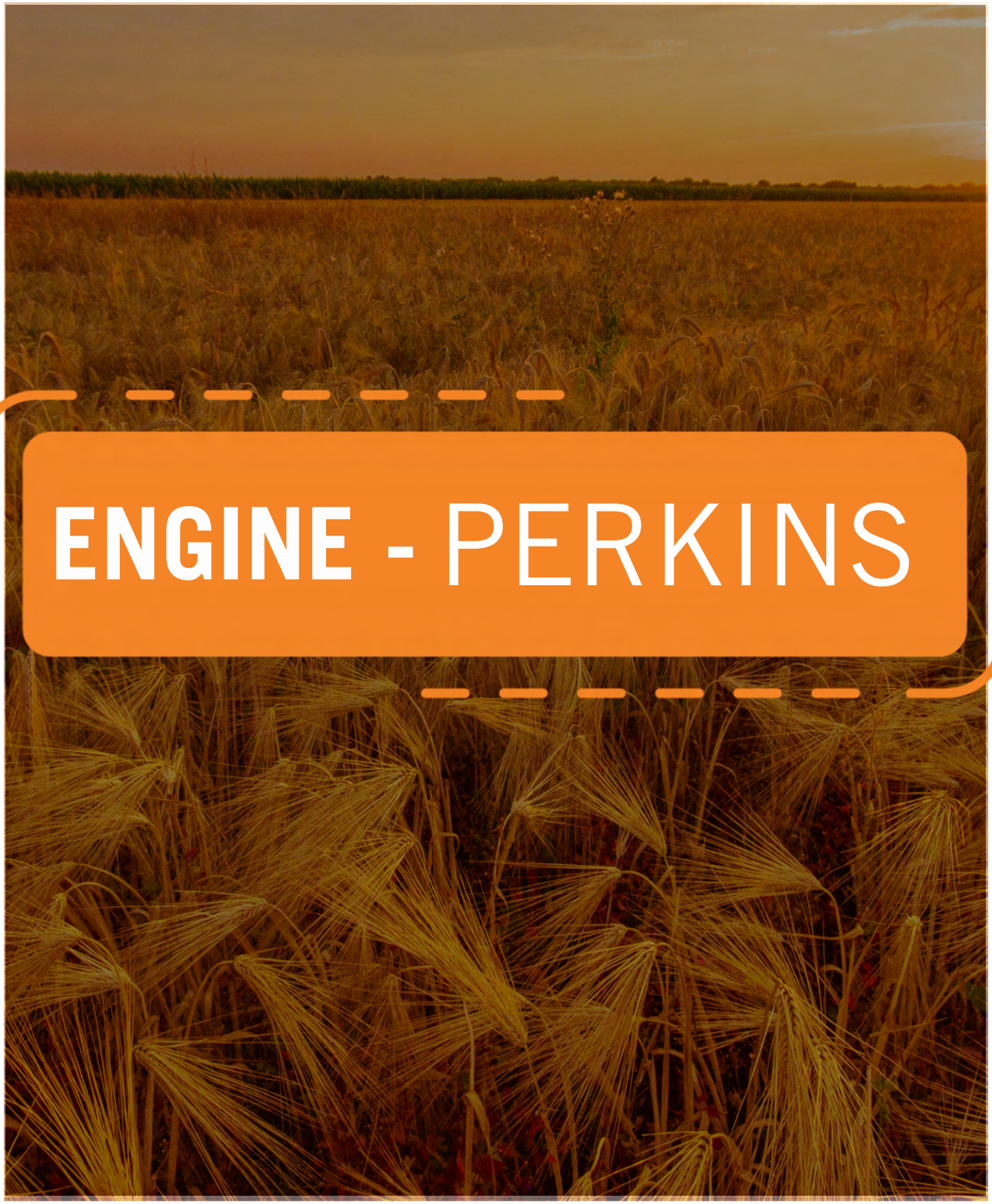

ENGINE - PERKINS

Perkins 3.152						
Description	**Details**	**Part #**	**Q**	**35x**	**135**	**240**
Big End Bearings	Std	85036	1	x	x	x
	.010” (.25mm)	85036A	1	x	x	x
	.020” (.50mm)	85036B	1	x	x	x
	.030” (.75mm)	85036C	1	x	x	x
Block	Rope Seal	ZZ50273	1	x	x	
	Lip Seal	ZZ50272			x	x
Cam Follower		8600012	6	x	x	x
Conrod		ZZ90011	3	x	x	x
	Bolt	0095250	6	x	x	x
	Nut	33221327	6	x	x	x
Crankshaft	Rope Seal	ZZ90148	1	x	x	
	Lip Seal	ZZ90150			x	x
Cylinder Head	Straight Injectors	ZZ80058	1	x		
	Angle Injectors	ZZ80082			x	x
Filter - Oil	Screw	2654408	1		x	x
	Paper	26540132	1	x	x	
Filter - Fuel	Tin	26561117	1		x	x
	Paper	30242 GP184	1	x	x	
Fuel Lift Pump	2 Hole + Glass	2641406	1	x		
	2 Hole	2641A063	1		x	
	4 Hole	26 413 382 641 712	1		x	x
Gasket Set	Top	U5LT0012	1	x		
		82886	1		x	x
	Bottom	U5LB0012	1		x	x
		82887 U5LB0010	1	x	x	
Gear	Crankshaft	410132	1	x	x	x
	Camshaft	410241	1	x	x	x
	Fuel Pump	31164632	1	x	x	x
Main Bearing	Std	68084	1	x	x	x
	.010” (.25mm)	68084A	1	x	x	x
	.020” (.50mm)	68084B	1	x	x	x
	.030” (.75mm)	68084C	1	x	x	x
Oil Pump		41314078	1	x	x	
		41314187	1		x	x
Oil Seal	Timing Cover	2415344	1	x	x	x
	Rear Main Rope	36883119	2	x	x	
	Rear Main Lip	2418F475	1		x	x
	Tacho	30854	1	x	x	x
Piston	Flat Top 5 Ring	81512	3	x		
	Pre Topped 5 Ring	68332			x	x
Ring Set	5 Ring	41158057	3	x	x	x
	Chrome	41158058	3	x		
Rocker Shaft		ZZ90047	1	x	x	x
Sleeve	Semi Finish	31358323	3	x	x	x
	Fully Finish	31358345	3	x	x	x
	Chrome	31358308	3	x		
Small End Bush		31134151	3	x	x	x
Spring	Inner	7800007	6	x	x	x
	Outer	7800006	6	x	x	x
Thermostat		2485666	1	x	x	x
Thrust Washer	Upper Std	31137211	2	x	x	x
	Lower Std	31137221	2	x	x	x
	Upper OS	31137212	2	x	x	x
	Lower OS	31137222	2	x	x	x
Valve Exhaust		910002	3	x	x	x
Valve Guide		33261723	6	x	x	x
Valve Inlet		31431261	3	x	x	x
Water Pump		U5MW0023	1	x	x	x

Perkins 4.203			
Description	**Details**	**4.203** 65/165	**Q**
Big End Bearings	Std	85035	1
	.010” (.25mm)	85035A	1
	.020” (.50mm)	85035B	1
	.030” (.75mm)	85035C	1
Conrod Bolt		0095250	8
Conrod Nut		33221327	8
Filter – Oil	Screw	2654403	1
Filter – Fuel	Tin	26561117	1
Fuel Lift Pump	2 Hole + Glass	ULPK0009	1
	2 Hole	ULPK0010	1
Gasket Set	Top	U5LT0100 82907	1
	Bottom	U5LB1117 82908	1
Main Bearings	Std	68082	1
	.010” (.25mm)	68082A	1
	.020” (.50mm)	68082B	1
	.030” (.75mm)	68082C	1
Oil Pump		41314189	1
Oil Seal – Timing Cover	Front	2418F436	1
Oil Seal – Rear Main	Rope	36883119	2
Piston	5 Ring	68832	4
Ring Set	5 Ring	41158057	4
Sleeve	Semi Finish	31358323	4
Small End Bush		31134151	4
Thermostat		2485668	1
Thrust Washer	Upper Std	31137211	2
	Lower Std	31137221	2
Valve Exhaust	Std	31431591	4
Valve Guide	Exhaust	33261723	8
	Inlet		
Valve Inlet	Std	31431281	4
Water Pump		U5MW0089	1

Perkins 4.212			
Description	**Details**	**4.212 165**	**Q**
Big End Bearing	Std	85042	1
	.010” (.25mm)	85042A	1
	.020” (.50mm)	85042B	1
	.030” (.75mm)	85042C	1
Cam Bush		31134165	1
Conrod Bolt		32762145	8
Conrod Nut		33221328	8
Filter – Oil	Screw	2654403	1
Filter – Fuel	Tin	26561117	1
Fuel Pump	2 Hole	ULPK0011	1
	4 Hole	2641725 ULKP0001	1
Gasket Set	Top	U5LT1014 68250	1
	Bottom	U5LB0016	1
Main Bearings	Std	81558	1
	.010” (.25mm)	81558A	1
	.020” (.50mm)	81558B	1
	.030” (.75mm)	81558C	1
Oil Pump		41314182	1
Oil Seal – Timing Cover	Front	2418F436	1
Oil Seal – Rear Main	Rope	36883108	2
	Lip	2418F475	1
Piston	4 Ring	86721	4
	3 Ring	89206	4
Ring Set	4 Ring	41158044	4
	3 Ring	41158045	4
Sleeve	Semi Finish	31358393	4
Small End Bush		31134123	4
Thermostat		2485659	1
Thrust Washer	Upper Std	31137551	2
	Lower Std	31137561	2
Valve Exhaust	Std	31431641	4
Valve Guide	Exhaust	3343F002	8
	Inlet	3343J002	
Valve Inlet	Std	31431881	4
Water Pump		U5MW0104	1

Perkins 4.236 – 4.236T – 4.248					
Description	**Details**	**236N**	**236C**	**236T**	**248**
Balancer	F Mounted	41733082	41733082	41733082	41733082
	Mid Mounted		4111K062	4111K062	
Big End Bearings	Std	85042	85042	85042	85042
	.010” (.25mm)	85042A	85042A	85042A	85042A
	.020” (.50mm)	85042B	85042B	85042B	85042B
	.030” (.75mm)	85042C	85042C	85042C	85042C
Block		ZZ50226	ZZ50226	ZZ50112	ZZ50227
Cylinder Head		ZZ80175	ZZ80175	ZZ80077	ZZ80175
Crankshaft		ZZ90081	ZZ90081	ZZ90202	ZZ90202
	2300 rpm +			ZZ90212	ZZ90212
Cam Bush		32762165/32	32762165/32	32762165/32	32762165/32
Conrod	Natural	ZZZ90009	ZZ90009		ZZ90009
	Turbo			ZZ90013	
	F/Split			4115C331	
Conrod Bolt		32762144/5	32762144/5	32762144/5	32762144/5
	F/Split				
Conrod Nut		33221328	33221328	33221328	33221328
Filter	Oil	2654403	2654403	2654403	2654403
		66420310	66420310	66420310	66420310
	Fuel	26561117	26561117	26561117	26561117
		66620071	66620071	66620071	66620071
Fuel Lift Pump	4 Hole	ULPK0001	ULPK0001	ULPK0001	ULPK0001
	2 Hole	ULPK0011			ULPK0011
Guide	Exhaust	3343J021	3343J021	3343J021	3343J021
	Inlet	3343F041	3343F041	3343F041	3343F041
Gasket Set	Top	U5LT0015	U5LT0015	U5LT0015 68250	U5LT0015
		68250	68250		68250
	Bottom	U5LB0016	U5LB0016	U5LB0016	U5LB0016
Liner	S/F Fire Ring	31358393	31358393	31358393	
	F/F Fire Ring	31358394	31358394	31358394	
	S/F Fire Ring				31358346
	F/F Fire Ring				31358352
	WO FR SF	3135X031	3135X031	3135X031	
	WO FR FF	3135X032	3135X032	3135X032	
Main Bearings	Std	81558	81558	81558	81558
	.010” (.25mm)	81558A	81558A	81558A	81558A
	.020” (.50mm)	81558B	81558B	81558B	81558B
	.030” (.75mm)	81558C	81558C	81558C	81558C
Oil Seal	Front	2418F436	2418F436	2418F436	2418F436
	Rear	2418F475	2418F475	2418F475	2418F475
Oil Pump	Mid Mounted		4132F041	4132F041	
	Front Mounted	4132F012	4132F012	4132F012	4132F012
Piston	3 Ring Pre Topped	U5LP0011	U5LP0011	U5LT0046	U5LP0009
	3 Ring Untopped	U5LU0010	U5LU0010	U5LT0022	
	5 Ring	82878			
Ring Set	3 Ring	41158147	41158147	41158145	41158022
				4181A022	
	5 Ring	41158041			
S-End Bush	34.96mm	31134123	31134123	31134131	31134123
Thrust Washer	Top	31137551	31137551	31137551	31137551
		31137312	31137312	31137312	31137312
	Bottom	31137561	31137561	31137561	31137561
		33137322	33137322	33137322	33137322
Valve	Intake	31431641	31431641	31431641	31431641
		31431315	31431315	31431315	31431315
	Exhaust	3142A052	3142A052	3142A052	3142A052
Water Pump		U5MW0104	U5MW0104	U5MW0106	U5MW0104
	22mm Shaft			U5MW0108	

Perkins 6.354					
Description	**Details**	**354N**	**354C**	**354T**	**OTHER**
Big End Bearings	Std	85043	85043	85043	
	.010” (.25mm)	85043A	85043A	85043A	
	.020” (.50mm)	85043B	85043B	85043B	
	.030” (.75mm)	85043C	85043C	85043C	
Cam Followers		3142U031	3142U031	3142U031	
Cam Bush		32762165/32	32762165/32	32762165/32	
Conrod	Natural	ZZZ90009	ZZ90009	ZZ90013	ZZ90009
	Turbo				ZZ90013
	F/Split			4115C331	4115C331
Conrod Bolt		32762144/5	32762144/5	32762144/5	
	F/Split				
Conrod Nut		33221328	33221328	33221328	
Filter	Oil	2654403	2654403	2654403	
		66420310	66420310	66420310	
	Fuel	26561117	26561117	26561117	
		66620071	66620071	66620071	
Fuel Lift Pump	4 Hole	ULPK0002	ULPK0002	ULPK0002	
Gasket Set	Top	U5LT0017	U5LT0017	U5LT0017	
	Bottom	U5LB0023	U5LB0023	U5LB0023	
Liner	S/F Fire Ring	31358393	31358393	31358393	
	F/F Fire Ring	31358394	31358394	31358394	
	WO FR SF	3135X031	3135X031	3135X031	
	WO FR FF	3135X032	3135X032	3135X032	
Main Bearings	Std	68079	68079	68079	
	.010” (.25mm)	68079A	68079A	68079A	
	.020” (.50mm)	68079B	68079B	68079B	
	.030” (.75mm)	68079C	68079C	68079C	
Oil Seal	Front	2418F436	2418F436	2418F436	
	Rear	2418F475	2418F475	2418F475	
					2418F701 Green
					2417F704 Red
Oil Pump		4132F015	4132F015	4132F016	
Push Rod		31434307	31434307	31434307	
Piston	3 Ring Pre Topped	U5LP0014	U5LP0014	68802	
	3 Ring Untopped	U5LU0013		68803	
	5 Ring	68314			
Ring Set	3 Ring	41158017	41158017	41158005	
	5 Ring	41158041			
Small End Bush	34.96	31134123	31134123	31134131	31134123
	43 38				31134131
	42 39				3112E005
					3112E041
	43 38				3112A006
Thrust Washer	Std Top – O/S	31137551	31137551	31137551	
	Std Top	31137312	31137312	31137312	
	Std Bottom	31137561	31137561	31137561	
	Std Bottom	33137322	33137322	33137322	
Thermostat					

Perkins 6.354					
Description	**Details**	**354N**	**354C**	**354T**	**OTHER**
Valve	Intake	31431315	31431315	31431315	
	Exhaust	3142A052	3142A052	3142A052	
V-Stem Seals					
Valve Guides	Exhaust Long	3343J021	3343J021	3343J021	
	Intake short	3343F041	3343F041	3343F041	
Water Pump		U5MW0129	U5MW0129	U5MW0129	
	22mm Shaft	U5MW0133	U5MW0133	U5MW0133	

Perkins 1004 1006									
Description	**Details**	**Part #**	**AA**	**AB**	**AS**	**AR**	**YA**	**YB**	**YH**
Rings		4181A019	x						
		4181A041	x						
		4181A026		x					
		4181A033			x				x
	103mm Bore Std	U4181A045				x			
	.020” (.50mm)	U4181A046				x			
	.040” (1.00mm)	U4181A047				x			
Small End Bush	34.96	31134123	x				x		
	43/38	31134131		x				x	
	42/39	3112E005				x			x
		3112E041			x	x			x
	43/38	3112A006				x		x	x
Spring	Outer	31745122		x	x	x	x	x	x
	Inner	31744133		x	x	x	x	x	x
	Single	3174P405	x		x		x		
Thrust Washer	Std Top	31137551	x	x	x	x	x	x	x
	Std Bottom	31137561	x	x	x	x	x	x	x
Thermostat		2485613	x	x			x	x	
V-Stem Seals		33817117	x	x	x	x	x	x	x
Valve Guide	Exhaust	3343J021	x	x			x	x	x
		3318A705			x	x			
	Inlet	3343F041	x	x			x	x	x
		3313A012			x	x			
Valve	Intake	3142L051	x				x		
		3142L072		x				x	x
		3142H041			x	x			
	Exhaust	3142A051	x	x			x	x	x
		3142D061			x	x			
		3142A052	x				x		
Water Pump		U5MW0156	x	x			x		
	Turbo	U5MW0160	x	x			x	x	x
		U5MW0193			x	x			
		U5MW0194			x	x			

1004 Series	AA-AB
1006 Series	YA-YB
New 1004 Series	AK-AR
New 1006 Series	YG
AR51091U591441K	AR Serial

Perkins 1004 1006									
Description	**Details**	**Part #**	**AA**	**AB**	**AS**	**AR**	**YA**	**YB**	**YH**
Big End Bearings	Std 1004	85402	x	x	x	x			
	.010” (.25mm)	85042A	x	x	x	x			
	.020” (.50mm)	85042B	x	x	x	x			
	.030”(.75mm)	85042C	x	x	x	x			
	Std 1006	85043					x	x	x
	.010” (.25mm)	85043A					x	x	x
	.020” (.50mm)	85043B					x	x	x
	.030” (.75mm)	85043C					x	x	x
	Std 1004	U5ME0034	Fracture Split Conrod						
	.010” (.25mm)	U5ME0034A							
	.020” (.50mm)	U5ME0034B							
	.030” (.75mm)	U5ME0034C							
	Std 1006	U5ME0035							
	.010” (.25mm)	U5ME0035A							
	.020” (.50mm)	U5ME0035B							
	.030” (.75mm)	U5ME0035C							
Camshaft Bush		32762165	x	x	x	x	x	x	x
Cam Followers		3142U031	x	x	x	x	x	x	x
Conrod	Normal	ZZ90009	x				x		
	Turbo	ZZ90013		x			x	x	
	Fracture Split	4115C331			x	x		x	x
Conrod Bolt		32762144/5	x	x		x	x	x	
	Fracture Split								
Conrod Nut		33221328	x	x		x	x	x	
Crankshaft	Up To 2400 rpm	ZZ90202	x	x	x	X			
	From 2400 rpm	ZZ90212	x	x	x	X			
	1006 N,C,T	ZZ90218					x	x	x
Cylinder Head	1004 N	ZZ80218	x						
	1004 T	ZZ80220		x					
	1006 N	ZZ80228					x		
Filter	Oil	2654403	x	x	x	x	x	x	x
		2654407					x	x	x
	Fuel	26561117	x	x			x	x	x
		26560143	x	x	x	x	x	x	x
		26560145	x	x	x	x	x	x	x
		26560608	x	x	x				
Fuel Lift Pump	1004	ULPK0034	x	x	x	x			
	1006	ULPK0002					x	x	x
Gasket Set	Top	U5LT0178	x	x					
		U5LT0317				x			
		U5LT1300							x
		U5LT0179					x	x	

Perkins 1004 1006									
Description	**Details**	**Part #**	**AA**	**AB**	**AS**	**AR**	**YA**	**YB**	**YH**
Gasket Set	Bottom	U5LB1164	x	x	x				
		U5LB0153					x	x	
		U5LB1327				x			
		U5LB1331							x
		U5LB1319				x			
Liners	Press Fit	3135X041	x	x	x		x	x	
	Slip Fit	3135X042	x	x	x		x	x	
	Press Fit	3135X062							x
	Slip Fit	3135x061							x
		No Liner				x			
Main Bearings	Std 1004	81558	x	x	x	x			
	.010” (.25mm)	81558A	x	x	x	x			
	.020” (.50mm)	81558B	x	x	x	x			
	.030” (.75mm)	81558C	x	x	x	x			
	Std 1004	U5MB0034				x			
	Std 1006	U5MB0007					x	x	x
	.010” (.25mm)	U5MB0007A					x	x	x
	.020” (.50mm)	U5MB0007B					x	x	x
	.030” (.75mm)	U5MB0007C					x	x	x
Oil Pump		4132F051	x			x			
		4132F056		x	x	x			
		4132F043					x		
	399SE	4132F057					x	x	x
	Shaft	3271H004	x	x	x	x	x	x	x
	Idler Bush	2511437	x	x	x	x	x	x	x
	Idler Gear	4111A008	x	x	x	x	x	x	x
Oil Seal	Timing Cover	2418F436/7	x	x	x	x	x	x	x
	Rear Main	2418F475	x	x	x	x	x	x	
		2418F701			x	x		x	x
		2418F704							x
Pistons		U5LL0015	x				x		
		U5LL0017	x				x		
		U5LL0021	x				x		
		U5LL0014		x				x	
		U5LL0016		x				x	
		U5LP0057			x				x
	103mm Bore Std	U5LP0058				x			
	.020” (.50mm)	U5LP0058B				x			
	.040” (1.00mm)	U5LP0058D				x			
Push Rod		34134307	x	x	x	x	x	x	x

Perkins 1004 1006									
Description	**Details**	**Part #**	**AA**	**AB**	**AS**	**AR**	**YA**	**YB**	**YH**
Rings		4181A019	x						
		4181A041	x						
		4181A026		x					
		4181A033			x				x
	103mm Bore Std	U4181A045				x			
	.020” (.50mm)	U4181A046				x			
	.040” (1.00mm)	U4181A047				x			
Small End Bush	34.96	31134123	x				x		
	43/38	31134131		x				x	
	42/39	3112E005				x			x
		3112E041			x	x			x
	43/38	3112A006				x		x	x
Spring	Outer	31745122		x	x	x	x	x	x
	Inner	31744133		x	x	x	x	x	x
	Single	3174P405	x		x		x		
Thrust Washer	Std Top	31137551	x	x	x	x	x	x	x
	Std Bottom	31137561	x	x	x	x	x	x	x
Thermostat		2485613	x	x			x	x	
V-Stem Seals		33817117	x	x	x	x	x	x	x
Valve Guide	Exhaust	3343J021	x	x			x	x	x
		3318A705			x	x			
	Inlet	3343F041	x	x			x	x	x
		3313A012			x	x			
Valve	Intake	3142L051	x				x		
		3142L072		x				x	x
		3142H041			x	x			
	Exhaust	3142A051	x	x			x	x	x
		3142D061			x	x			
		3142A052	x				x		
Water Pump		U5MW0156	x	x			x		
	Turbo	U5MW0160	x	x			x	x	x
		U5MW0193			x	x			
		U5MW0194			x	x			

1004 Series	AA-AB
1006 Series	YA-YB
New 1004 Series	AK-AR
New 1006 Series	YG
AR51091U591441K	AR Serial

Perkins 1006 YA31420 Massey Ferguson 399SE				
Description	**Details**	**Q**	**Perkins**	**MF**
Big End Bearings	Std	1	85043	736934M91
	.010” (.25mm)	1	85043A	736935M91
	.020” (.50mm)	1	85043B	736936M91
	.030” (.75mm)	1	85043C	736937M91
Block		1	ZZ50270	4222525M91
Cam Bush		1	31134165	4222017M1
Cam Follower		12	3142U031	4222069M1
Conrod	Rod Complete	6	ZZ90009	3637034M91
	Bolt	12	32762145	4222485M1
	Nut	12	33221328	3637030M1
Crankshaft		1	ZZ90218	3637019M91
Cyl Head Assy		1	ZZ80225	
Fan Belt		1		3614706M92
Filter	Oil	1	2654403	1447048M1
		1	2654407	1447031M1
	Fuel	2	26561117	3405418M1
		2	26560608	3638291M1
Fuel Pump		1		4222105M91
Gasket Sets	Top	1	U5LT1179	3638697M91
	Bottom	1	U5LB1153	4222229M91
Hose	Bypass	1	U5MH0050	3637257M91
	Top	1		3614420M2
	Bottom	1		3614419M1
Liners	Press Fit	6	3135X041	748215M1
	Slip Fit	6	3135X042	748216M1
	Liner Kit	4	U5MK0723K	
Main Bearings	Standard	1	U5MB0007	3637020M91
	.010” (.25mm)	1	U5MB0007A	3637021M91
	.020” (.50mm)	1	U5MB0007B	3637022M91
	.030” (.75mm)	1	U5MB0007C	3637023M91
Oil Pump		1	4132F043	3638595M91
	Shaft	1	3271H004	3641847M1
	Idler Bush	1	2511437	1447752M1
Oil Seal	Timing Cover	1	2418F436	1447690M1
	Rear Main	1	2418F475	1447691M1
Piston		6	U5LL0021	3641806M91
Rings		6	4181A041	4222706M91
		6	4181A027	4222706M91
Small End Bush	34.96mm	6	31134123	733767M1
Thermostat		2	2485613	1447384M1
Thrust Washer	Standard Top	2	31137551	747128M1
	Standard Bottom	2	31137561	747129M1
Valve	Inlet	6	3142L051	748413M1
	Exhaust	6	3142A051	748309M1
Valve Guide	Exhaust	6	3343J021	4223074M1
	Inlet	6	3343F041	4223073M1
Valve Stem Seal		12	33817117	3637041M1
Valve Spring	Outer	12	31745122	740467M1
	Inner	12	31744133	740465M1
	Single	12	3174P405	3637057M1
Water Pump		1	U5MW0159	4223109M91
	30mm	1	U7LW0148	4222456M91
	38mm	1	7ULW0087	4222467M91

Perkins 1104										
Description	**Details**	**Part #**	**RE**	**RF**	**RG**	**RH**	**RJ**	**RK**	**RR**	**RS**
Big End Bearings	Standard 1104	U5ME0026	x	x	x	x	x	x		x
	.010” (.25mm)	U5ME0026A	x	x	x	x	x	x		x
	.020” (.50mm)	U5ME0026B	x	x	x	x	x	x		x
	.030” (.75mm)	U5ME0026C	x	x	x	x	x	x		x
	Standard 1104	U5ME0013							x	
	.010” (.25mm)	U5ME0013A							x	
	.020” (.50mm)	U5ME0013B							x	
	.030” (.75mm)	U5ME0013C							x	
Block	Ind	ZZ50311	x	x	x	x	x		x	x
	Ag	ZZ50312	x		x			x		
Camshaft		3141D211	x		x					
		3141D212		x					x	
		3141D222				x	x	x		x
Camshaft Bush		3112D071	x	x	x	x	x	x	x	x
Cam Followers		3142U991	x	x	x	x	x	x	x	x
Conrod	F Red	4115C311	x	x	x	x	x	x	x	x
	G Orange	4115C312	x	x	x	x	x	x	x	x
	H White	4115C313	x	x	x	x	x	x	x	x
	J Green	4115C314	x	x	x	x	x	x	x	x
	K Purple	4115C315	x	x	x	x	x	x	x	x
	L Blue	4115C316	x	x	x	x	x	x	x	x
Conrod Bolt		3212V003	x	x	x	x	x	x	x	x
Conrod Nut										
Crankshaft		ZZ90214				x		x		
		ZZ90222	x		x		x			x
		ZZ90223		x						
		ZZ90224	x						x	
Cylinder Head		ZZ80267				x		x		
		ZZ90268			x		x			x
		ZZ90269		x						
		ZZ90270	x						x	
Filter	Fuel									
	Oil	2654407	x	x	x	x	x	x	x	x
	Water	26560201	x	x	x	x	x	x	x	x
Fuel Lift Pump		4132A018	x	x	x	x	x	x	x	x
	Landini	2641A203	x		x					
Gasket	Top Set	U5LT0356							x	
		U5LT0357	x	x	x	x	x	x		x
	Bottom Set	U5LB0381	x	x		x	x		x	
		U5LB0382								x
		U5LB0383	x		x			x		
	Cylinder Head	3681E046	x	x	x		x	x		x
		3681E051	x			x			x	
Heater Plug		2666A016	x	x	x	x	x	x	x	x
Liners										
Main Bearings	Std 1104	U5MB0018	x	x	x	x	x	x	x	x
	.010” (.25mm)	U5MB0018A	x	x	x	x	x	x	x	x
	.020” (.50mm)	U5MB0018B	x	x	x	x	x	x	x	x
	.030” (.75mm)	U5MB0018C	x	x	x	x	x	x	x	x
Oil Cooler		4134W001			x	x	x	x		
		4134W003	x	x						
		4134W005								x
		4134W006							x	
Oil Press. Switch		2848062	x	x	x	x	x	x	x	x

Perkins 1104										
Description	**Details**	**Part #**	**RE**	**RF**	**RG**	**RH**	**RJ**	**RK**	**RR**	**RS**
Oil Pump		4111K073	x		x			x		
		4132F071	x	x		x	x		x	x
Oil Seal	Timing Cover	2418F437	x	x	x	x	x	x	x	x
	Rear Main	2418F704	x	x	x	x	x	x	x	x
Push Rod		31434307	x	x	x	x	x	x	x	x
Piston & Rings	Std	4115P011	x	x					x	
	.020" (.50mm) OS	4115P012	x	x					x	
	.040" (1.00mm) OS	4115P013	x	x					x	
	Std	4115P015			x	x	x	x		
	.020" (.50mm) OS	4115P016			x	x	x	x		
	.040" (1.00mm) OS	4115P017			x	x	x	X		
	Std	4115P025								x
	.020" (.50mm) OS	4115P026								x
	.040" (1.00mm) OS	4115P027								x
Rocker Shaft		4115R612	x	x	x	x	x	x	x	x
Small End Bush		3112A005	x	x	x	x	x	x	x	x
Spring	Outer									
	Inner									
	Single									
Starter		2873K406			x					
		2873K621	x				x		x	x
		2873K625		x	x	x				
Thrust Washer	Std Top									
	Std Bottom									
Temp Switch		2848062	x	x	x	x	x	x	x	x
Thermostat		4133L507	x	x	x	x	x	x	x	x
		4133L508	x	x	x	x	x	x	x	x
		4133509	x	x	x	x	x	x	x	x
Valve Stem Seals										
Valve Guide	Exhaust									
	Inlet									
Valve	Intake	3142H071	x	x	x	x	x	x	x	x
	Exhaust	3142A151	x	x	x	x	x	x	x	x
Water Pump		U5MW0194	x	x	x	x	x	x	x	x

1104C Series	RE - RG

P4000 – Massey Ferguson 400 Series			
Description	**Details**	**P4000 440**	**P4000T 460**
Balancer	Front Mounted	41733082 70991809	Same
Big End Bearings	Std	85042	Same
	.010” (.25mm)	85042A	Same
	.020” (.50mm)	85042B	Same
	.030” (.75mm)	85042C	Same
Crankshaft		70998009	
Conrod	Natural	ZZ90009	
Conrod Bolt		32762145	Same
Conrod Nut		33221328	Same
Fuel Lift Pump		2641A067 4224451 4222106	Same
	Primer Assembly	70993018	Same
Gasket Set	Top	P4056 P4008 70490304	P4056 P4008 70490304
	Bottom	P4006	P4006
Liner	FF	3135X034	Same
	SF	3135X033	Same
Liner Kit		P4016	P4012
Main Bearings	Std	81558	Same
	.010” (.25mm)	81558A	Same
	.020” (.50mm)	81558B	Same
	.030” (.75mm)	81558C	Same
Push Rod		70998041	Same
Oil Seal	Front	2418F436	Same
	Rear	2418F475	Same
Oil Pump	Mid Mounted	4132F041	
Piston		P4015	P4009
Ring Set		P4017	P4017
Small End Bush	34.96mm	70998085	70998078
Tappets		31434163	Same
Thrust Washer	Top	31137551	Same
	Bottom	31137561	Same
Valve	Intake	70910035	70910097
	Exhaust	70910099	70910099
	Guide	70420019	70420019
	Seat	70470095	Same
	Insert	70470104	Same
	Spring	70998136	70998136

Balancer		
Description	**Part #**	**Picture**
Front Mounted (4 Bolt)	41733082 70991809	
Mid Mounted (6 Bolt)	4111K062 4111K051 4111K053	
Repair Kit Front Mounted	U5BK0001 3405340M1	

Blocks			
Engine	**Rope Seal**	**Lip Seal**	**Picture**
152	ZZ50273	ZZ50272	
236N		ZZ50226	
236T		ZZ50112	
248		ZZ50227	
1004	Ask your Landboupart specialist for details on the different applications		
1006		ZZ50270	
1103		4181V016 MF00-105	
1104		ZZ50325 MF00-106	

Bell Housing			
Engine	**Details**	**Part #**	**Picture**
1006		3714V001	

Connecting Rod			
Engine		**Part #**	**Picture**
212 236 248 P4000		ZZ90009	
152 203		ZZ90010	
152 (35) 192 (65)		ZZ90011	
236T 354T	Old Type	ZZ90013	
	Fracture Crack Type	4115C331	

Crank Pulley		
Engine	**Part #**	**Picture**
152	31143733	
203	31148677	
212/236/248 1 Bolt	31148791	
236/248 3 Bolt	31148713	

Damper Pulley		
Details	**Part #**	**Picture**
2 Groove	2635674	
3 Groove	2635697	

Bridge Piece		
Engine	**Part #**	**Picture**
212/236/248	36277831	

Bush			
Description	**Engine**	**Part #**	**Picture**
Conrod	212 236 248 354 1004 1006	31134123 34.96mm	
	236T 354T 1004T 1006T	31134131 38.96mm	
	236T 354T 1004T 1006T Fracture Crack OD43 ID38	3112A006	
	152 203	31134151	
Camshaft	212 236 248 1004	31134132	

Crankshaft			
Engine	**Rope Seal**	**Lip Seal**	**Picture**
152	ZZ90148 ZZ90116 84402	ZZ90150 94458	
203	U5BG0028 ZZ90121		
212	ZZ90100 85719	94430	
236N 248	ZZ90093	ZZ90081 ZZ90082	
236T		ZZ90202	
1004		ZZ90212	Check Serial # For Application
		ZZ90202	
1006		ZZ90218	

Cylinder Heads			
Engine	**Part #**	**Part #**	**Picture**
152	ZZ80058 Flat Top Piston & Straight Injectors	ZZ80082 Dish Top Pistons & Angle Injectors	
203	ZZ80033		
212	ZZ80175		
236N			
248			
236T	ZZ80077		

Cylinder Heads			
Engine	**Part #**	**Part #**	**Picture**
1004	ZZ80218 Non Turbo	ZZ80220 Turbo	Check Serial # For Application
1006	ZZ80225 Non Turbo	ZZ80228 Turbo	
P4000	P4024 Screw In	P4021 Clip On	

Fly Wheel			
Description	**Details**	**Part #**	**Picture**
Tab Washer	3x	0921062	
Bolt	6x	2182122	
Ring Gear	115T 152 203 212 236 248 P4000	0410236	
	122T 236 354	0410264	
	133T 236 354 1004 1006	31162126	
Fly Wheel	12” Lip 212 236 248	31215851	
		31216362 Ventilation	
Fly Wheel + Ring Gear	1006	3638443	

Rocker Shaft		
Engine	**Part #**	**Picture**
152	4115R805	
212/236/248	ZZ90007 ZZ90158	
354	ZZ90036	

Cylinder Head Bolt & Stud			
Engine	**Description**	**Part #**	**Picture**
236 248	Bolt 140mm 2x	32166337	
	Bolt 119mm 12x	32166338	
	Bolt 104mm 8x	32166339	
152	Bolt 11 x 85mm	32181457	
	Bolt 11 x 100mm	32181458	
	Stud Short	32524131	
	Stud Medium	32524133	
	Stud Long	32524138	

Push Rod		
Engine	**Part #**	**Picture**
212 236 248 354 1004 1006	31434307	

Seal Timing Cover		
Engine	**Part #**	**Picture**
152	2415344	
212 236 248 354 1004 1006 P4000	2418F436 70730043	

Seal Rear Main			
Description	**Engine**	**Part #**	**Picture**
Lip Type	152 212 236 248 354 P4000	2418F475 70730050	
	1004 1006 Green Seal In Housing Serial Split	2418F701	
	1004 1006	2418F704	
Rope Type	152 203	36883106	
	212 236 248 354	36883108	

Rear Main Seal Housing			
Description	**Engine**	**Part #**	**Picture**
Rope Type	152	41422034	
	212 236 248 318 354	ZZ90044	
Lip Type	152	4142V002	
	212 236 248 354	37513853 4142V064	

Oil Pump			
Engine	**Details**	**Part #**	**Picture**
152		41314078	
	240	41314187	
203		41314164 41314189	
212		41314054 41314182 4132F012	
236 1004	Mid Mounted Balancer	4132F041	
354N		4132F015	
354T		4132F016	
1004		4132F051	
1004T		4132F056	

Oil Pump			
Engine	**Details**	**Part #**	**Picture**
1006N		4132F043	
1006T	*Serial Number YA31240	4132F057	
1104			
1006		4132F067 4225034	
*All 1006 Engines with serial # **YA31240** use 4132F057 – sprayers fitted			

Oil Filler			
Engine	**Details**	**Part #**	**Picture**
152		35784117	
212 236 248		35784123	

Oil Filler Cap			
Engine	**Details**	**Part #**	**Picture**
All		2487854	
400 Series Brazil		70150038	

Oil Filter Head			
Engine	**Details**	**Part #**	**Picture**
1004		3773K043	
212 236 248 318		37764181	
152 203		37764251	

Dipstick			
Engine	**Details**	**Part #**	**Picture**
152 203	185mm	31786412	
212 236 318	205mm	31787437	
236 248	239mm	31787452	
P4000		70320078	

Oil Drain			
Engine	**Details**	**Part #**	**Picture**
Drain Plug	152 203 212 236 248 354	2487004	
	P4000	748160	

Oil Pickup			
Engine	**Details**	**Part #**	**Picture**
Strainer	152	37725448 37725435	
	212	37725443	

Timing Gear			
Description	**Engine**	**Part #**	**Picture**
Camshaft Gear	152	0410241 3116K111	
	203	0410231	
	212 236 248	31171353	
		3117L023 From Serial	

Timing Gear			
Description	**Engine**	**Part #**	**Picture**
Camshaft	152	31415261	
	212 236 248 To Serial	31415321	
	236 248 From Serial 400 Series Brazil	31415374 31415371	
	354	31416303	
	1006	31416305	
	1104	3141D211	
Crank Gear	152	0410132	
	203	0410228	
	212 236 248 P4000	31171681	
	354	31171211	

Timing Gear			
Description	**Engine**	**Part #**	**Picture**
Idler Gear	152	31164632	
Idler Gear	203	0410227	
	212 236 248	41115023	
Idler Hub	212 236 248	33426161	
Injector Pump Gear	152	31164631	
	203	41115004	
	212 236 248	31171461	
		31171521	

Tappet Cover			
Description	**Engine**	**Part #**	**Picture**
Tappet Cover	152	37188571	
	212 236 248	37188549	
	1006	4142X062	
	P4000	70992764	

Timing Cover & Back Plate			
Description	**Engine**	**Part #**	**Picture**
Timing Cover	152	ZZ90039	
	212 236 248	37166401	
	1006	3716C431	
	P4000	70992825	

Timing Cover & Back Plate			
Description	**Engine**	**Part #**	**Picture**
Timing Cover	152	37161481	
Back Plate	212 236 248	37161871	
Timing Cover	1006	3716C522	
Back Plate	P4000	4236256	

Filters				
Description	**Details**	**Engine**	**Part #**	**Picture**
Oil Filter		3 Cylinder	2654408	
	Short	4 & 6 Cylinder	2654403	
	Long	4 & 6 Cylinder	2654407	
Fuel Filter	Short	3-4-6 Cylinder	26561117	
	Short	1000 Series	26560143	
	Long		26560145	
		1103	26560163	
	Eco Filter	1104	26560201	
		1106	2656F843	

If fitted with 2x oil filters use 2654403
If fitted with 1x oil filter use 2654407

LANDBOUPART

www.landboupart.com

COMBINE • ENGINE • TRACTOR • GROUND ENGAGING • PARTS

FILTERS - CHALLENGER

Challenger Tractor	Engine	Oil Filter	Fuel Filter	Fuel Water Separator
MT855C	CAT C15 (6/15.2 TIA)	**1R-1808**	**1R-0749**	**326-1643**
MT865C	CAT C18 (6/18.1 TIA)			
MT965C	CAT C18 (6/18.1 TIA)			

LANDBOUPART

www.landboupart.com

COMBINE • ENGINE • TRACTOR • GROUND ENGAGING • PARTS

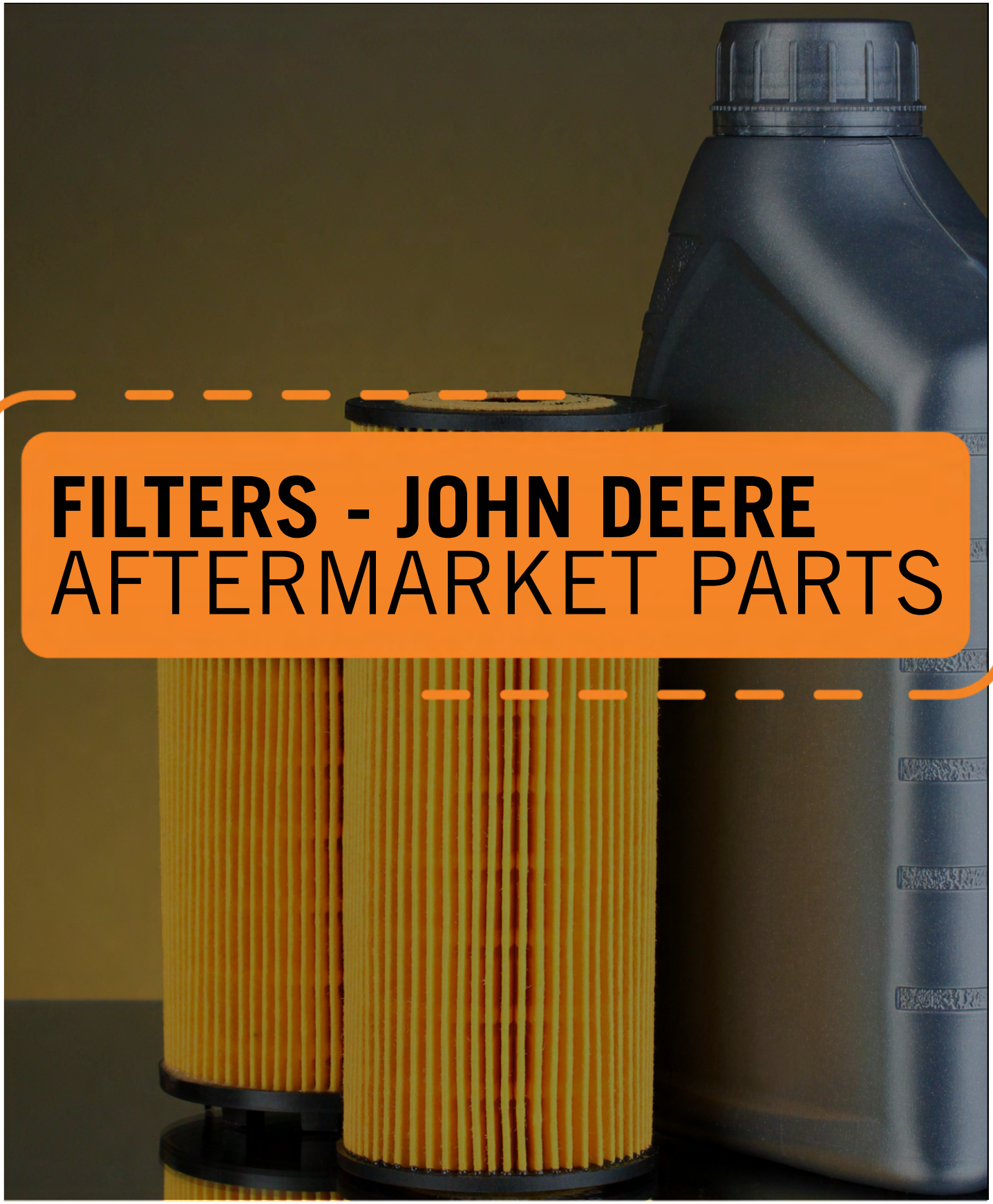

FILTERS - JOHN DEERE
AFTERMARKET PARTS

Description	Part Number	Old Series								3050 Series		4000 Series														
		1140	1850	1950N	2120	2130	2140	3130	3140	3350	3650	4520	4050	4250	4450	4650	4850	4455	4255	4755	4955	4960	4040	4240	4440	4430
FUEL FILTER	26561117				X	X	X																			
FUEL FILTER	AR50041	X	X	X	X	X	X	X	X	X	X	X											X	X	X	X
FUEL FILTER	AR86745												X	X	X	X	X	X	X	X	X	X				
HYDRAULIC FILTER	AR75603	X	X	X	X	X	X	X	X	X	X	X														X
HYDRAULIC FILTER	AR94510												X	X	X	X	X	X	X	X	X	X	X	X	X	
OIL FILTER	AR43634											X											X	X	X	X
OIL FILTER	RE57394												X	X	X	X	X	X	X	X	X	X				
OIL FILTER	T19044	X	X	X	X	X	X	X	X	X	X															

Description	Part Number	41 Series						5000 Series										5000 Utility Series		5003 Series		5010 Utility Series			5020 Series	
		1641	2141	2541	2941	3141	3641	5215	5315	5415	5503	5515	5615	5700	5715	5725	5820	5300	5400	5303	5403	5310	5410	5510	5320	5520
FUEL FILTER	26561117	X	X	X	X	X	X																			
FUEL FILTER	AL153517																X									
FUEL FILTER	AR50041	X	X	X	X	X	X																			
FUEL FILTER	RE60021							X	X	X	X	X	X		X	X				X	X	X	X	X	X	X
FUEL FILTER	RE62419													X			X									
HYDRAULIC FILTER	AL118036																X									
HYDRAULIC FILTER	AR75603	X	X	X	X	X	X																			
HYDRAULIC FILTER	RE45864									X	X		X	X	X	X		X	X	X	X	X	X	X	X	X
OIL FILTER	2654403	X	X	X	X	X																				
OIL FILTER	RE504836												X		X	X	X									
OIL FILTER	RE59754											X											X	X		X
OIL FILTER	T19044							X	X		X			X				X	X		X	X			X	

Description	Part Number	5025 Series			51 Series						6000 Series				6003 Series		6005 Series	6010 Series				6015 Series	6020 Series				
		5325	5425	5625	2251	2351	2651	2951	3351	3651	6300	6400	6600	6900	6403	6603	6205	6210	6410	6610	6910	6215	6620	6820	6920	6220	6320	6420
FUEL FILTER	26561117				X	X																						
FUEL FILTER	AR50041				X	X	X	X	X	X																		
FUEL FILTER	RE509031																									X	X	X
FUEL FILTER	RE509208																									X		X
FUEL FILTER	RE517181																	X	X	X	X							
FUEL FILTER	RE62418										X	X	X	X			X	X	X	X	X	X						
FUEL FILTER	RE62419										X	X	X	X	X	X	X	X	X	X	X	X				X	X	X
HYDRAULIC FILTER	AL112936																X					X						
HYDRAULIC FILTER	AL118036										X	X	X	X				X	X	X	X		X	X	X	X	X	X
HYDRAULIC FILTER	AL156625										X	X	X	X			X	X	X	X	X	X	X	X	X	X	X	X
HYDRAULIC FILTER	AL160771																					X						
HYDRAULIC FILTER	AR75603				X	X	X	X	X	X																		
OIL FILTER	RE504836														X	X						X	X	X	X	X	X	X
OIL FILTER	RE59754														X	X	X	X	X	X	X							
OIL FILTER	T19044				X	X	X	X			X	X	X	X														

Description	Part Number	6025 Series	6030 Series					6D Series					6M Series			
		6225	6330	6430	6630	6830	6930	6115D	6130D	6100D	6125D	6140D	6145M	6155M	6175M	6195M
FUEL FILTER	RE522878				X	X	X									
FUEL FILTER	RE526557	X	X	X				X	X	X	X	X				
FUEL FILTER	RE529643				X	X	X	X	X	X	X	X				
FUEL FILTER	RE529644	X														
FUEL FILTER	RE546336		X	X												
HYDRAULIC FILTER	AL156625	X	X	X	X	X	X									
HYDRAULIC FILTER	AL169573	X	X	X	X	X	X						X	X	X	X
HYDRAULIC FILTER	AL221066												X	X	X	X
OIL FILTER	RE504836	X	X	X	X	X	X	X	X	X	X	X				

JD Series	JD Model	Oil Filter		Fuel Filter			Hydraulic Filter	
Old Series	1140	T19044		AR50041			AR75603	
	1850							
	1950N							
	2120				26561117			
	2130							
	2140						AR75603	
	3130							
	3140						AR75603	
3050 Series	3350	T19044		AR50041			AR75603	
	3650							
4000 Series	4520	AR43634		AR50041			AR75603	
	4050			AR86745			AR94510	
	4250							
	4450							
	4650							
	4850							
	4455			AR86745				
	4255							
	4755							
	4955							
	4960	RE57394						
	4040	AR43634		AR50041 (x2)				
	4240							
	4440							
	4430						AR75603	
41 Series	1641	2654403		AR50041	26561117		AR75603	
	2141							
	2541							
	2941							
	3141							
	3641							

JD Series	JD Model	Oil Filter		Fuel Filter			Hydraulic Filter	
5000 Series	5215	T19044		RE60021				
	5315							
	5415						RE45864	
	5503	T19044						
	5515	RE59754						
	5615		RE504836				RE45864	
	5700	T19044		RE62419				
	5715		RE504836	RE60021				
	5725		RE504836		RE60021			RE45864
	5820	RE504836		RE62419	AL153517		AL118036	
5000 Utility Series	5300	T19044					RE45864	
	5400							
5003 Series	5303			RE60021			RE45864	
	5403	T19044						
5010 Utility Series	5310	T19044		RE60021			RE45864	
	5410	RE59754						
	5510							
5020 Series	5320	T19044		RE60021			RE45864	
	5520	RE59754						
5025 Series	5325							
	5425							
	5625							
51 Series	2251	T19044 DJ11909		AR50041	26561117		AR75603	
	2351							
	2651							
	2951							
	3351							
	3651							
6000 Series	6300	T19044		RE62419	RE62418		AL156625	AL118036
	6400							
	6600							
	6900							

JD Series	JD Model	Oil Filter		Fuel Filter			Hydraulic Filter	
6003 Series	6403	**RE59754** (BSN 001347) **RE504836** (ASN 001348)		**RE62419**				
	6603	**RE59754** (BSN 001236) **RE504836** (ASN 001237)						
6005 Series	6205	**RE59754**		**RE62419**	**RE62418**		**AL156625**	AL113475 **AL112936** AL112922 AL203060
6010 Series	6210	**RE59754**		**RE62419**	**RE62418**	**RE517181**	**AL156625**	**AL118036**
	6410							
	6610							
	6910							
6015 Series	6215	**RE504836**		**RE62419**	**RE62418**		**AL156625**	AL203060 **AL112936** (BSN 366729) AL203061 **AL160771** (ASN 366730)
6020 Series	6620	**RE504836**					**AL156625**	**AL118036**
	6820							
	6920							
	6220			**RE62419** (BSN 799999) **RE509031** (ASN 800000)	**RE509208** (Pre)		**AL156625** (without JD IVT)	**AL118036** (without JD IVT)
	6320							
	6420				**RE509208** (Pre)			
6025 Series	6225	**RE504836**		**RE529644**	**RE526557**		**AL156625**	**AL169573**
6030 Series	6330	**RE504836**		**RE546336**	**RE526557** (Pre)		**AL156625**	**AL169573**
	6430							
	6630			**RE529643**	**RE522878**			
	6830							
	6930							
6D Series	6115D	**RE504836** RE541420		**RE529643** RE541922	**RE526557**			
	6130D							
	6100D							
	6125D							
	6140D							

JD Series	JD Model	Oil Filter		Fuel Filter			Hydraulic Filter	
6M Series	6145M						AL221066	AL169573
	6155M							
	6175M							
	6195M							

LANDBOUPART

www.landboupart.com

COMBINE • ENGINE • TRACTOR • GROUND ENGAGING • PARTS

FILTERS - LANDINI
AFTERMARKET PARTS

Description	Part Number		Global Farm	LandPower					Large	Legend		Legend NG	Legend NG TDI	Power Farm		Power Master	Power Mondial	Solis
		7860 New / EPA2	95-105	130 160	125-135 145-165	165 T3	T3: 125-135 145	180 T3	10000 13000	105 115	130 145 165	115-120 130-140 160-180	125-130 135-145 160-165 185	95 105HC Cab	75-80 85-90 95-100 105	180/190 220/230	95-110 115	90
AIR FILTER, INNER	**3540052M1**		X											X				X
AIR FILTER, INNER	**3540047M1**	X																
AIR FILTER, INNER	**3658045M1**			X														
AIR FILTER, INNER	**3685267M2**					X										X		
AIR FILTER, INNER	**3695442M92**					X	X											
AIR FILTER, OUTER	**3310355M91**								X	X								
AIR FILTER, OUTER	**3540051M1**		X											X				X
AIR FILTER, OUTER	**3540046M1**	X																
AIR FILTER, OUTER	**3658044M1**			X														
AIR FILTER, OUTER	**3685266M1**					X										X		
AIR FILTER, OUTER	**3695442M92**					X	X											
CAB FILTER	**3683245**			X		X												
CAB FILTER	**3677515M93**			X2		X2								X2		X2		
CAB FILTER (SCREEN)	**3684782**			X		X												
CAB FILTER (SCREEN)	**3677790**			X2		X2												
FUEL FILTER	**26561118 3541384**		X											X				
FUEL FILTER	**3541160M1**	X2		X2														
FUEL FILTER	**4207949M1**					X												
FUEL FILTER	3689026															X		
FUEL FILTER, PRE	**4207834M1**					X												
FUEL FILTER, PRE	3689035															X		
FUEL FILTER, PRIMARY	**10004801AA**																	X
FUEL FILTER, SECONDARY	**10004802AA**																	X
HYDRAULIC FILTER	**3530223M93**	X	X											X				
HYDRAULIC FILTER	**3551956M91**									X	X	X	X					
HYDRAULIC FILTER	**3555711M91**														X		X	
HYDRAULIC FILTER	**3684239M91**			X														
HYDRAULIC FILTER	**4212017M91** 3696308					X												
HYDRAULIC FILTER	3691102															X		
HYDRAULIC FILTER	**10027339AB** 10009106AB																	X
OIL FILTER	**2654407**		X	X										X				
OIL FILTER	**3540049M91**	X																
OIL FILTER	**3689066M1** 707209					X										X		
OIL FILTER	**2654403** 10023651AA																	X
STEERING PUMP FILTER	**3300901M91**	X	X											X				
STEERING PUMP FILTER	**3540378M1**			X		X												
STEERING PUMP FILTER	**3662033M1**			X	X		X	X				X	X					

Landini Model		Engine Oil Filter	Fuel Filter		Air Filter		Hydraulic Filter	Steering Pump Filter	Cab Filter
					Inner	Outer			
	7860 New / EPA2	**3540049M91**	**3541160M1** (x2)		**3540047M1**	**3540046M1**	**3530223M93** and 3307250M91	**3300901M91**	
Global Farm	95-105	**2654407**	**26561118** or 3541384		**3540052M1**	**3540051M1**	**3530223M93**	**3300901M91**	
LandPower	130 / 160	**2654407**	**3541160M1** (x2)		**3658045M1**	**3658044M1**	**3684239M91**	**3540378M1** and **3662033M1**	**3683245** **3684782** (Screen) **3677515M93** (x2) **3677790** (Screen) (x2)
	125-135 145-165							**3662033M1**	
	165 T3	**3689066M1** 707209	**4207949M1**	**4207834M1** (Pre)	**3685267M2** and **3695542M92**	**3685266M1** and **3695441M91**	3696308 **4212017M91**	**3540378M1** and **3662033M1**	**3683245** **3684782** (Screen) **3677515M93** (x2) **3677790** (Screen) (x2)
	T3: 125-135-145				**3695542M92**	**3695441M91**		**3662033M1**	
	180 T3							**3662033M1**	
Large	10000-13000					**3310355M91**			
Legend	105-115					**3310355M91**	**3551956M91**		
	130-145-165								
Legend New Generation	115-120-130 140-160-180						**3551956M91**	**3662033M1**	
Legend New Generation TDI	125-130-135 145-160-165 185						**3551956M91**	**3662033M1**	
Power Farm	95/105HC Cab	**2654407**	**26561118** or 3541384		**3540052M1**	**3540051M1**	**3530223M93**	**3300901M91**	**3677515M93** (x2)
	75-80-85 90-95-100 105						**3555711M91**		
Power Master	180/190 220/230	**3689066M1** 707209	3689026	3689035 (Pre)	**3685267M2**	**3685266M1**	3691102		**3677515M93** (x2)
Power Mondial	95-110-115						**3555711M91**		
Solis	90	10023651AA or **2654403**	(Primary) **10004801AA**	(Secondary) **10004802AB**	41000746AA **3540052M1**	41000745AA **3540051M1**	10009106AB **10027339AB**		

LBP LANDBOUPART

www.landboupart.com

COMBINE • ENGINE • TRACTOR • GROUND ENGAGING • PARTS

FILTERS - MASSEY FERGUSON
AFTERMARKET PARTS

Description	Part Number	200 Series			300 Series								400 Series																
		268X	275X	290X	365	375	375E	390	398	399	399C	399SE	415	425	435N	435X	440	440S	440X	455	555X	460	460X	465	470X	475	470X	480	480X
AIR FILTER, INNER	055114R1												X																
AIR FILTER, INNER	055120R1													X	X		X	X											
AIR FILTER, INNER	055125R1																					X							
AIR FILTER, INNER	**2128048K1**	X																											
AIR FILTER, INNER	2400032S1			X																									
AIR FILTER, INNER	**3595501M1**				X	X		X	X	X		X																	
AIR FILTER, INNER	**3595501M1**				X	X		X	X	X		X																	
AIR FILTER, INNER	**3901478M1**																							X		X			
AIR FILTER, INNER	**6223615M1**																						X		X				X
AIR FILTER, INNER	**6223619M1** **NH No. 87344136**																		X		X								
AIR FILTER, INNER	**H117200090160**																					X							
AIR FILTER, OUTER	**2128047K1**	X																											
AIR FILTER, OUTER	2400031S1			X																									
AIR FILTER, OUTER	**3595500M1**				X	X		X	X	X		X																	
AIR FILTER, OUTER	**3595500M1**				X	X		X	X	X		X																	
AIR FILTER, OUTER	3595503M1								X	X		X																	
AIR FILTER, OUTER	**3901477M1**																							X		X			
AIR FILTER, OUTER	**H117200090150**																					X							
AIRFILTER, OUTER	055113R1												X																
AIRFILTER, OUTER	055119R1													X	X		X	X											
AIRFILTER, OUTER	055124R1																					X							
AIRFILTER, OUTER	**6223614M1**																						X		X				X
AIRFILTER, OUTER	**6223618M1** **NH No. 87344135**																		X		X								
CAB FILTER	3478327M1				X	X		X	X	X		X																	
CAB FILTER	**6214966M1**																		X		X		X						X
FUEL FILTER	**26561117**									X		X																	
FUEL FILTER	**036530R1**																						X						X
FUEL FILTER	**26566602** **V836339371**				X	X	X	X	X				X	X	X		X	X				X		X	X	X			
FUEL FILTER	**3604411M1**		X																										
FUEL FILTER	3904832M1																				X								
FUEL FILTER	**3904875M1**		X																										
FUEL FILTER	**3905864M91**	X		X																									
FUEL FILTER	**3905865M1**	X		X																									
FUEL FILTER	**3906772M1**			X																									
FUEL FILTER	**4224811M1**																		X		X								
FUEL FILTER	6283611M91																		X										
FUEL FILTER	V836316376																						X						X
FUEL FILTER (SHORT)	**2656613**									X		X																	
FUEL FILTER (SHORT)	**26561117**									X		X																	
HYDRAULIC FILTER	1607042M91	X		X																									
HYDRAULIC FILTER	**1687042M91** **1870199M92**		X							X		X	X	X	X		X	X				X		X		X			
HYDRAULIC FILTER	**3595175M1**																		X		X		X						X
HYDRAULIC FILTER	**3771122M92**				X	X		X	X	X		X																	
HYDRAULIC FILTER	**3800305M91**				X	X		X	X	X		X																	
OIL FILTER	**2654403**			X	X	X	X	X	X					X	X		X	X				X							
OIL FILTER	**2654407**									X		X							X		X			X		X			
OIL FILTER	**2654407**									X		X							X		X			X		X			
OIL FILTER	1447082M2												X																
OIL FILTER	1447082M92	X																											
OIL FILTER	**3906733M1** 1447048M		X	X																									
OIL FILTER	**V836662580**																						X						X
OIL FILTER	**V836679586**																								X				
STEERING PUMP FILTER	**034391T1**													X	X		X	X				X		X		X			
STEERING PUMP FILTER	3175203M1												X																
STEERING PUMP FILTER	**3595175M1**				X	X		X	X	X		X																	
STEERING PUMP FILTER	**4249310M91**	X		X																									

Description	Part Number	4200 Series								5300 Series				5400 Series				6400 Series				7400 Series		7600 Series							
		4235	4240	4245	4255	4260	4265	4270	4708	5340	5355	5360	5365	5445	5455	5460	5465	6465	6475	6485	6495	7485	7499	7614	7615	7618	7619	7620	7624	8480	8690
AIR FILTER, INNER	055120R1	X	X		X					X				X	X																
AIR FILTER, INNER	055125R1									X	X	X																			
AIR FILTER, INNER	3782387M1																			X	X	X									
AIR FILTER, INNER	**3901478M1**							X		X		X	X																		
AIR FILTER, INNER	**4270018M1**																													X	
AIR FILTER, INNER	4270034M1															X															
AIR FILTER, INNER	4271468M1																X	X	X												
AIR FILTER, INNER	**4286474M1**																			X	X		X								
AIR FILTER, INNER	**4288979M1**																X	X	X												
AIR FILTER, INNER	**4379575M1**								X																						
AIR FILTER, INNER	**H117200090160**			X		X	X							X	X																
AIR FILTER, INNER	**H931202090400**																			X	X		X								X
AIR FILTER, OUTER	2782386M1																			X	X	X									
AIR FILTER, OUTER	**3901477M1**							X		X		X	X																		
AIR FILTER, OUTER	4270033M1															X															
AIR FILTER, OUTER	4271467M1																X	X	X												
AIR FILTER, OUTER	**4278631M1**																													X	
AIR FILTER, OUTER	**4286473M2**																			X	X		X								
AIR FILTER, OUTER	**4286479M2**																														X
AIR FILTER, OUTER	**4288978M1**																X	X	X												
AIR FILTER, OUTER	**4379574M1**								X																						
AIR FILTER, OUTER	**H117200090150**			X		X	X							X	X																
AIRFILTER, OUTER	055119R1	X	X		X					X				X	X																
AIRFILTER, OUTER	055124R1									X	X	X																			
CAB FILTER	3388840M3	X	X	X	X	X	X	X		X	X	X	X	X	X	X	X	X	X	X	X										
CAB FILTER	3786649M3													X	X	X	X	X	X	X	X	X	X								
CAB FILTER	4272853M1													X	X																
CAB FILTER	**4284929M2**																														X
CAB FILTER	**4378102M1**													X	X																
CAB SUSPENSION FILTER	4276397M1																	X	X	X	X	X									
CAB SUSPENSION FILTER	4277532M91																	X	X	X	X										
FUEL FILTER (SHORT)	**2656613**	X	X	X	X	X	X	X					X																		
FUEL FILTER (LONG)	**26560145**																X	X													
FUEL FILTER (SHORT)	**26561117**	X	X	X	X	X	X	X					X																		
FUEL FILTER	**26566602**									X	X	X																			
FUEL FILTER	**265666032**									X	X	X																			
FUEL FILTER	**3780299M1**																X	X													
FUEL FILTER	3780931M1																X	X	X												
FUEL FILTER	**3905873M91**																														X
FUEL FILTER	**3907943M1**																					X									
FUEL FILTER	4224701M2																	X	X	X	X										
FUEL FILTER	**4224811M1**													X	X	X															
FUEL FILTER	**4226708M1**													X	X	X	X	X	X												
FUEL FILTER	V836862600																			X	X										
FUEL FILTER	**V836867591**																X	X	X	X	X	X								X	
FUEL FILTER	**V836867595**																X	X	X	X	X	X	X							X	
FUEL FILTER	**V837079718** V837091129																														X
HYDRAULIC FILTER	**3615949M3**	X	X		X			X		X	X	X	X																		
HYDRAULIC FILTER	3618662M2																	X	X	X	X										
HYDRAULIC FILTER	3712404M1																	X	X	X	X										
HYDRAULIC FILTER	3714453M2																	X	X	X	X										
HYDRAULIC FILTER	**3771122M92**			X		X	X			X	X	X	X																		
HYDRAULIC FILTER	**3790002M1**													X	X		X	X	X	X	X										
HYDRAULIC FILTER	**3792287M1**													X	X	X	X														
HYDRAULIC FILTER	**3792287M1**																	X	X	X	X										
HYDRAULIC FILTER	**3800305M91**	X	X	X	X	X	X	X		X	X	X	X																		
HYDRAULIC FILTER	3800350M91	X	X		X			X		X	X	X	X																		
HYDRAULIC FILTER	**4285174M1**																														X
HYDRAULIC FILTER	4300400M1													X	X	X	X	X	X	X	X										
HYDRAULIC FILTER	4303303M1													X	X	X	X	X	X	X	X										
HYDRAULIC FILTER	**4309229M1**													X	X	X															
HYDRAULIC FILTER	F916100490010																					X									
HYDRAULIC FILTER	F91610060001O																					X								X	X
OIL FILTER	**2654403**	X	X	X	X					X	X	X					X2	X2	X2												
OIL FILTER	**2654407**					X	X	X					X	X	X	X															
OIL FILTER	**2654407**					X	X	X					X	X	X	X															
OIL FILTER	1447082M2																														
OIL FILTER	**V836362228**																													X	
OIL FILTER	**V836662580**																X	X	X	X	X	X	X								
OIL FILTER	**V836862582**																													X	X
STEERING PUMP FILTER	**3595175M1**	X	X	X	X	X	X	X																							
STEERING PUMP FILTER	3907929M92																					X									
STEERING PUMP FILTER	**4305928M91**													X	X	X	X	X	X	X	X										

MF Model	Engine Make	Engine Model	Engine Oil Filter	Fuel Filter		Air Filter		Hydraulic Filter		Steering Pump Filter	Cab Filter	Cab Suspension Filter
						Inner	Outer					
268 Xtra			1447082M92	**3905865M1**	**3905864M91**	**2128048K1**	**2128047K1**	**1607042M91**		**4249310M91**		
275 Xtra			**3906733M1**	**3604411M1**	**3904875M1**			**1607042M91**				
290 Xtra			**3906733M1** **1447048M** **2654403**	**3905865M1** and **3906772M1**	**3905864M91**	2400032S1	2400031S1	**1607042M91**		**4249310M91**		
365	Perkins ADE	A4.236 A4.236	**2654403** 1447048M2 2654342 3118119R1 3621142M1	**26566602** 265666032 V836339371 1896287M91 26560602 3405419M3 3621009M1		**3595501M1**	**3595500M1**	**3771122M92**	**3800305M91** 25015M91	**3595175M1**	3478327M1	
375	Perkins ADE	A4.236 A4.236	**2654403** 1447048M2 2654342 3118119R1 3621142M1	**26566602** 265666032 V836339371 1896287M91 26560602 3405419M3 3621009M1		**3595501M1**	**3595500M1**	**3771122M92**	**3800305M91** 25015M91	**3595175M1**	3478327M1	
390	Perkins ADE	A4.236 A4.236	**2654403** 1447048M2 2654342 3118119R1 3621142M1	**26566602** 265666032 V836339371 1896287M91 26560602 3405419M3 3621009M1		**3595501M1**	**3595500M1**	**3771122M92**	**3800305M91** 25015M91	**3595175M1**	3478327M1	
398	Perkins ADE	AT4.236 AT4.236	**2654403** 1447048M2 2654342 3118119R1 3621142M1	**26566602** 265666032 V836339371 1896287M91 26560602 3405419M3 3621009M1		**3595501M1**	**3595500M1** and 3595503M1	**3771122M92**	**3800305M91** 25015M91	**3595175M1**	3478327M1	
399	ADE	A6.354.4	**2654407** 1447031M91	**26561117** **2656613** 3405418M2 1077260M91 218577A1 26560017 3438731M91 836218M91		**3595501M1**	**3595500M1** and 3595503M1	**1687042M91** 1810744M91 **1870199M92** (Later Version) (Short 89x62mm) and **3771122M92**	**3800305M91** 25015M91	**3595175M1**	3478327M1	
399SE	Perkins	1006.6	**2654407** 1447031M91	**26561117** **2656613** 3405418M2 1077260M91 218577A1 26560017 3438731M91 836218M91		**3595501M1**	**3595500M1** and 3595503M1	**1687042M91** 1810744M91 **1870199M92** (Later Version) (Short 89x62mm) and **3771122M92**	**3800305M91** 25015M91	**3595175M1**	3478327M1	
415	Perkins	AD3.152	1447082M2	**26566602** 265666032 V836339371 1896287M91 26560602 3405419M3 3621009M1		055114R1 3901463M2	055113R1 3901462M2	**1687042M91** 1810744M91 **1870199M92**		3175203M1		
425	Perkins	A4.236	**2654403** 1447048M2 2654342 3118119R1 3621142M1	**26566602** 265666032 V836339371 1896287M91 26560602 3405419M3 3621009M1		055120R1 3901465M2 4232609M1	055119R1 3901464M1	**1687042M91** 1810744M91 **1870199M92**		**034391T1**		
435N	Perkins	P4001	**2654403** 1447048M2 2654342 3118119R1 3621142M1	**26566602** 265666032 V836339371 1896287M91 26560602 3405419M3 3621009M1		055120R1 3901465M2 4232609M1	055119R1 3901464M1	**1687042M91** 1810744M91 **1870199M92**		**034391T1**		
440 440S	Perkins	P4001	**2654403** 1447048M2 2654342 3118119R1 3621142M1	**26566602** 265666032 V836339371 1896287M91 26560602 3405419M3 3621009M1		055120R1 3901465M2 4232609M1	055119R1 3901464M1	**1687042M91** 1810744M91 **1870199M92**		**034391T1**		
440 Xtra	Perkins	1104.4C Turbo	**2654407** 1447031M91	**4224811M1**	6283611M91	**6223619M1** **NH No.** **87344136**	**6223618M1** **NH No.** **87344135**	**3595175M1** 6223537M1			**6214966M1**	
455 Xtra	Perkins	1104.4C Turbo	**2654407** 1447031M91	**4224811M1**	3904832M1	**6223619M1** **NH No.** **87344136**	**6223618M1** **NH No.** **87344135**	**3595175M1** 6223537M1			**6214966M1**	

MF Model	Engine Make	Engine Model	Engine Oil Filter	Fuel Filter		Air Filter		Hydraulic Filter		Steering Pump Filter	Cab Filter	Cab Suspension Filter
						Inner	Outer					
460	Perkins	P4001T	**2654403** 1447048M2 2654342 3118119R1 3621142M1	**26566602** 265666032 V836339371 1896287M91 26560602 3405419M3 3621009M1		055125R1 3901476M1 **H117200090160**	055124R1 3901475M1 **H117200090150**	**1687042M91** 1810744M91 **1870199M92**		**034391T1**		
460 Xtra	Sisu	420 DS Turbo	**V836662580** 836662111 V836647133 V836662111	**036530R1**	V836316376	**6223615M1**	**6223614M1**	**3595175M1** 6223537M1			**6214966M1**	
465	Perkins	1006.6	**2654407** 1447031M91	**26566602** 265666032 V836339371 1896287M91 26560602 3405419M3 3621009M1		055130R1 **3901478M1**	055129R1 **3901477M1**	**1687042M91** 1810744M91 **1870199M92**		**034391T1**		
470 Xtra			**V836679586**	**26566602** 265666032 **V836339371** 1896287M91 26560602 3405419M3 3621009M1		**6223615M1**	**6223614M1**					
475	Perkins	1006.6T	**2654407** 1447031M91	**26566602** 265666032 V836339371 1896287M91 26560602 3405419M3 3621009M1		055130R1 **3901478M1**	055129R1 **3901477M1**	**1687042M91** 1810744M91 **1870199M92**		**034391T1**		
480 Xtra	Sisu	420 DS Turbo	**V836662580** 836662111 V836647133 V836662111	**036530R1**	V836316376	**6223615M1**	**6223614M1**	**3595175M1** 6223537M1			**6214966M1**	
4235	Perkins	1004.4T A4.41	**2654403** 1447048M2 2654342 3118119R1 3621142M1	**26561117** **2656613** 3405418M2 1077260M91 218577A1 26560017 3438731M91 836218M91		3901465M2 055120R1 4232609M1	3901464M2 055119R1	3800350M91	**3615949M3** 3619549M2	**3595175M1**	3388840M3 3388890M1 3900826M1	
4240		A4.41										
4245	Perkins	1004.4T	**2654403** 1447048M2 2654342 3118119R1 3621142M1	**26561117** **2656613** 3405418M2 1077260M91 218577A1 26560017 3438731M91 836218M91		**H117200090160** 3901476M1	**H117200090150** 3901475M1	**3771122M92**	**3800305M91** 25015M91	**3595175M1**	3388840M3 3388890M1 3900826M1	
4255						3901465M2 055120R1 4232609M1	3901464M2 055119R1	3800350M91	**3615949M3** 3619549M2			
4260	Perkins	1006.6	**2654407** 1447031M91	**26561117** **2656613** 3405418M2 1077260M91 218577A1 26560017 3438731M91 836218M91		**H117200090160** 3901476M1	**H117200090150** 3901475M1	**3771122M92**	**3800305M91** 25015M91	**3595175M1**	3388840M3 3388890M1 3900826M1	
4265	Perkins	1004.40TW	**2654407** 1447031M91	**26561117** **2656613** 3405418M2 1077260M91 218577A1 26560017 3438731M91 836218M91		**H117200090160** 3901476M1	**H117200090150** 3901475M1	**3771122M92**	**3800305M91** 25015M91	**3595175M1**	3388840M3 3388890M1 3900826M1	
4270	Perkins	1006.6	**2654407** 1447031M91	**26561117** **2656613** 3405418M2 1077260M91 218577A1 26560017 3438731M91 836218M91		**3901478M1** 055130R1	**3901477M2** 055129R1	3800350M91	**3615949M3** 3619549M2	**3595175M1**	3388840M3 3388890M1 3900826M1	
4708						**4379575M1**	**4379574M1**					
5340	Perkins	4 Cyl 4.1	**2654403** 1447048M2 2654342 3118119R1 3621142M1	**26566602** 265666032 V836339371 1896287M91 26560602 3405419M3 3621009M1		055125R1 and 3901465M2 055120R1 4232609M1 and 055130R1 **3901478M1**	055124R1 and 055119R1 3901464M1 and 055129R1 **3901477M1**	3800350M91 and **3771122M92**	**3615949M3** 3619549M2 and **3800305M91** 25015M91		3388840M3 3388890M1 3900826M1	

MF Model	Engine Make	Engine Model	Engine Oil Filter	Fuel Filter		Air Filter		Hydraulic Filter		Steering Pump Filter	Cab Filter	Cab Suspension Filter
						Inner	Outer					
5355	Perkins	4 Cyl 4.1	**2654403** 1447048M2 2654342 3118119R1 3621142M1	**26566602** 265666032 V836339371 1896287M91 26560602 3405419M3 3621009M1		055125R1	055124R1	3800350M91 and **3771122M92**	**3615949M3** 3619549M2 and **3800305M91** 25015M91		3388840M3 3388890M1 3900826M1	
5360	Perkins	4 Cyl 4.1	**2654403** 1447048M2 2654342 3118119R1 3621142M1	**26566602** 265666032 V836339371 1896287M91 26560602 3405419M3 3621009M1		055125R1 and 055130R1 **3901478M1**	055124R1 and 055129R1 **3901477M1**	3800350M91 and **3771122M92**	**3615949M3** 3619549M2 and **3800305M91** 25015M91		3388840M3 3388890M1 3900826M1	
5365	Perkins	1006.6	**2654407** 1447031M91	**26561117** **2656613** 3405418M2 1077260M91 218577A1 26560017 3438731M91 836218M91		**3901478M2** 055130R1	**3901477M2** 055129R1	3800350M91 and **3771122M92**	**3615949M3** 3619549M2 and **3800305M91** 25015M91		3388840M3 3388890M1 3900826M1	
5445 5455	Perkins	1104D-E44TA	**2654407** 1447031M91	**4224811M1** and **4226708M1**		**H117200090160** 3901476M1 and 3901465M2 055120R1 4232609M1	**H117200090150** 3901475M1 3615949M3 3619549M2 and 3901464M2	**3792287M1** and **4309229M1**	4300400M1 3619712M1 and **3790002M1** and 4303303M1 3616579M2 3907580M2	**4305928M91**	4272853M1 and 3786649M3 **4378102M1** and 3388840M3 3388890M1 3900826M1	
5460	Perkins	1104D-E44TA	**2654407** 1447031M91	**4224811M1** and **4226708M1**		4270034M1 3540052M1 6190628M1	4270033M1 3540051M1 6190627M1	**3792287M1** **and** **4309229M1**	4300400M1 3619712M1 and 4303303M1 3616579M2 3907580M2	**4305928M91**	3786649M3 and 3388840M3 3388890M1 3900826M1	
5465	Perkins	1106D-E66TA	(x2) **2654403** 1447048M2 2654342 3118119R1 3621142M1 and **V836662580** 836662111 V836647133 V836662111	**V836867591** 4275627M1 and **4226708M1**	**3780299M1** **26560145** 4223660M1 V836662561 and 3780931M1 and **V836867595**	4271468M1 and **4288979M1**	4271467M1 and **4288978M1**	**3792287M1**	4300400M1 3619712M1 and **3790002M1** and 4303303M1 3616579M2 3907580M2	**4305928M91**	3786649M3 and 3388840M3 3388890M1 3900826M1	
6465 6475	Perkins	1106C-E60TA	(x2) **2654403** 1447048M2 2654342 3118119R1 3621142M1 and **V836662580** 836662111 V836647133 V836662111	4224701M2 V836862602 and **V836867591** 4275627M1 and **4226708M1**	**3780299M1** **26560145** 4223660M1 V836662561 and 3780931M1 and **V836867595**	4271468M1 and **4288979M1**	4271467M1 and **4288978M1**	4303303M1 3616579M2 3907580M2 and 3618662M2 and 4300400M1 3619712M1	3712404M1 and **3792287M1** and 3714453M2 and **3790002M1**	**4305928M91**	3786649M3 and 3388840M3 3388890M1 3900826M1	4276397M1 and 4277532M91
6485 6495	Sisu	66 CTA	**V836662580** V836647133 V836662111	**V836867591** 4275627M1	4224701M2 V836862602 and V836862600 and **V836867595**	3782387M1 and **4286474M1** **H931202090400**	3782386M1 and **4286473M2**	4303303M1 3616579M2 3907580M2 and 3618662M2 and 4300400M1 3619712M1	3712404M1 and **3792287M1** and 3714453M2 and **3790002M1**	**4305928M91**	3786649M3 and 3388840M3 3388890M1 3900826M1	4276397M1 and 4277532M91
7485	Sisu	66 CTA	**V836662580** V836647133 V836662111	**3907943M1**	**V836867595** and **V836867591** 4275627M1	3782387M1	3782386M1	F916100490010	F916100600010	3907929M92	37866493M3	4276397M1
7499	Sisu		**V836662580** V836647133 V836662111	**V836867591** 4275627M1	**V836867595**	**4286474M1** **H931202090400**	**4286473M2**				37866493M3	
7614	Sisu											
7615	Sisu											
7618	Sisu											
7619	Sisu											

MF Model	Engine Make	Engine Model	Engine Oil Filter	Fuel Filter		Air Filter		Hydraulic Filter		Steering Pump Filter	Cab Filter	Cab Suspension Filter
						Inner	Outer					
7620	Sisu											
7624	Sisu											
8480			**V836862582** and **V836362228**	**V836867591**	**V836867595**	**4270018M1**	**4278631M1**	**F916100600010**				
8690			**V836862582**	**3905873M91**	V837091129 **V837079718**	**H931202090400**	**4286479M2**	**4285174M1**	**F916100600010**		**4284929M2**	

LBP LANDBOUPART

www.landboupart.com

COMBINE • ENGINE • TRACTOR • GROUND ENGAGING • PARTS

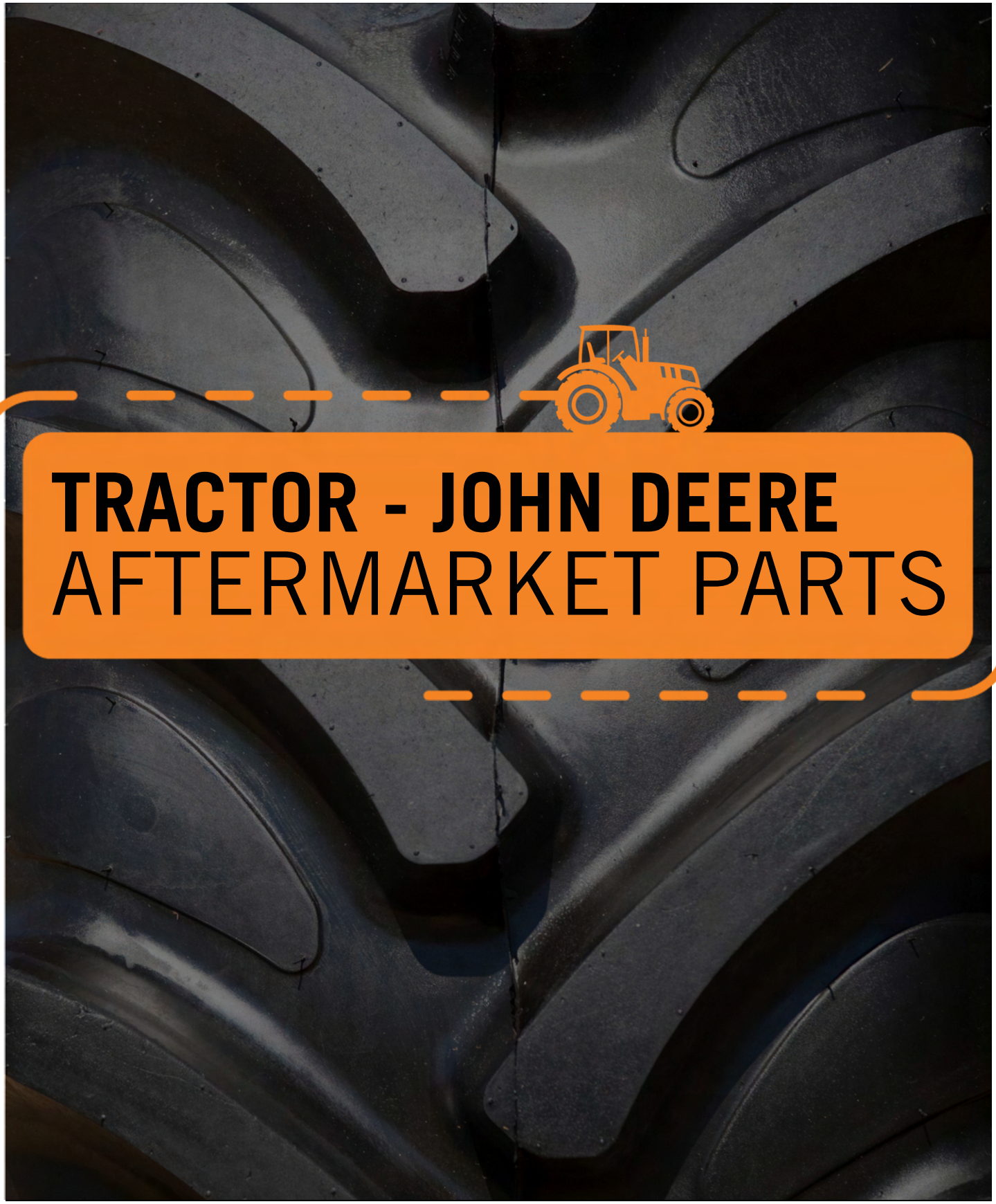

TRACTOR - JOHN DEERE
AFTERMARKET PARTS

AIR SYSTEM

Description	Details	Part Number	Model	Picture
Pre Cleaner	10"	**AZ24175**	3140 3350	
Silencer		**AL30338**	3140	
		AL35753		
		AL37167	3140, 3350	

BODY

Description	Details	Part Number	Model	Picture
Handle; Door		**AL113174**	6920	
Step		**AL155043**		

Original manufacturer names, part numbers and descriptions
are quoted for reference purposes only.
It is not implied that products of Landboupart are original parts.

BODY **...CONTINUED**

Description	Details	Part Number	Model	Picture
Step	2	**AL154911** AL113571	6000 Series	
	3	**AL156877** **AL154912** AL82365	6600 / 6800 / 6900	

BRAKES

Description	Details	Part Number	Model	Picture
Brake Disc		**AL28236**		
	OD = 12" 15 Splines	**AL30095**	2141, 2541, 2941 3141, 3641	
	OD = 12" 15 Splines	**AL65871**	3140, 3350, 3650	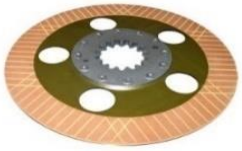
	OD = 12" 12 Splines	**AL65872**	1140, 1850 2251, 2351	

Original manufacturer names, part numbers and descriptions
are quoted for reference purposes only.
It is not implied that products of Landboupart are original parts.

BRAKES **...CONTINUED**

Description	Details	Part Number	Model	Picture
Brake Disc	Wear Plate 21.5mm Thick	**L114091**	6000 Series	

CLUTCH

Description	Details	Part Number	Model	Picture
Cable; Clutch	1030mm	**AL117192**	6900	
Clutch Assy		**AL68485**	1641, 2141, 2541, 2941, 3141 3140, 3350	
Clutch Plate	12"	**AL120015**		
Release Bearing		**AL39541**	1140, 1850, 1950N, 3140, 3350 1641, 2141, 2541, 2941, 3141, 3641 2251, 2351, 2651, 2951, 3351, 3651	

COOLING

Description	Details	Part Number	Model	Picture
Cap; Radiator		**AL76661**	5425/5625/5725	
		AL78005	5425/5625/5725	
		AT29054	3140	
Cap; Radiator		**R225615**	5303/5403	
		RE71863	5415/5615/5715	
		AL56759	3650	
		AR28482	4520, 8430, 8450, 8650	

COOLING **...CONTINUED**

Description	Details	Part Number	Model	Picture
Hose	Top	**L29263**	2130 / 3140	
		L34898	2140 / 3140	
		R135251	5415/5615/5715	
		R212292	5425/5625/5725	
Hose	Top	**R218899**	5303/5403	
		R53407	4440	
		R79346	4650/80	

COOLING **...CONTINUED**

Description	Details	Part Number	Model	Picture
Hose	Bottom	**R135250**	5415/5615/5715	
		R212293	5425/5625/5725	
		R218898	5303/5403	
		R53550	2130	
		R61434	4440	
		T28426	3130	

Original manufacturer names, part numbers and descriptions
are quoted for reference purposes only.
It is not implied that products of Landboupart are original parts.

COOLING **...CONTINUED**

Description	Details	Part Number	Model	Picture
Radiator		**RE212289**	5425/5625/5725	
		RE212667	5303/5403	
		RE70236	5415/5615/5715	
Tank	Auxiliary	RE212359	5425/5625/5725	
Water Pump		**RE530194**	6090	
		AR63573	4440	
		AR85250	2130	

COOLING **...CONTINUED**

Description	Details	Part Number	Model	Picture
Water Pump		**AR92416**	940/1040/1640/2140	
		AR92418	2140	
	4045 L	**RE60489**	2650/2850	
		AR92641	3140	
		AR97708		
		RE41157 **RE53757**	7400	
		RE49540		
	High Flow	**RE500734**		
	Low Flow	**RE505981**	5310, 5410, 5510 5215, 5315, 5415, 5515 5425, 5625, 5820	

Original manufacturer names, part numbers and descriptions
are quoted for reference purposes only.
It is not implied that products of Landboupart are original parts.

COOLING **...CONTINUED**

Description	Details	Part Number	Model	Picture
Water Pump		**RE505980**	6210, 6410, 6610, 6910, 7410, 7710 6220, 6320, 6420, 6620, 6820, 6920 6215	
		RE521502	P-Tech 8.1	
	24v	**RE523169**	4.5 Tier 3 6.8 Tier 3	
		RE55985	4250, 4450, 4650, 4850 4755, 4955 4960 8450, 8650	
		RE67185	5200/5300/5400	

Original manufacturer names, part numbers and descriptions
are quoted for reference purposes only.
It is not implied that products of Landboupart are original parts.

ENGINE

Description	Details	Part Number	Model	Picture
Camshaft Plug		**R82007**	6090	
Oil Pump		**RE543187**	6090	
	Camshaft Driven	**AR77489**	5400	
Filler Cap	Oil	**RE535560**	6210, 6410 7820, 7920	

FRONT AXLE - 2WD

Description	Details	Part Number	Model	Picture
Spindle	LH or RH	**AR74606**	2140 (ASN 430000), 2840, 2940, 2750, 2950, 3030 (ASN 186270), 3130 (ASN 186270)	

Original manufacturer names, part numbers and descriptions
are quoted for reference purposes only.
It is not implied that products of Landboupart are original parts.

FRONT AXLE - 4WD

Description	Details	Part Number	Model	Picture
Gear	Planetary Pinion 34 tooth	**L39994**	3140	
Shaft	Planetary Pinion	**L41123**	3140	

FUEL SYSTEM

Description	Details	Part Number	Model	Picture
Injector		**AR73673** AR89563 AR89564	2400-2850	
Injector Nozzle		**RE64391**	6081	
Filler Cap	Diesel	**AL113086**	5300, 5400 5310, 5410, 5510 6300, 6400, 6600, 6900 6210, 6410 6220, 6320, 6420, 6620	
		AL113087	6300, 6400, 6600, 6900 6210, 6410 6220, 6320, 6420, 6620	

FUEL SYSTEM **...CONTINUED**

Description	Details	Part Number	Model	Picture
Filter; Fuel	Secondary 109mm	**RE62418**	5820	
Fuel Lift Pump	Electric	**AL168483**	6020 / 6030	
	Electric	**AL155607**	6020 Series	
		RE502513		
		RE66153	7410 / 7730 / 7830 / 7930	

GEARBOX

Description	Details	Part Number	Model	Picture
Bushing		**T21445**	3140	

HYDRAULICS

Description	Details	Part Number	Model	Picture
Bushing		**AR49427**		
Coupler Half		**R38348**		
Drive Shaft		**L34570**	1140	
		L34572	1640 / 2140	
		L34573	2140	
		L42188	3350	
		T22914	2120	

Original manufacturer names, part numbers and descriptions
are quoted for reference purposes only.
It is not implied that products of Landboupart are original parts.

HYDRAULICS **...CONTINUED**

Description	Details	Part Number	Model	Picture
Gear	Transmission Pump	**AT26669**	3130	
Hydraulic Pump	25cm³	**AL161041**	6400/66/69	
	45cm³	**RE198342**	7830	
	63cm³	**RE240475**	7830	
		RE33467	8770	
	45cm³	**RE60267**	8300/84	
	45cm³	**RE65576**	8300T/84T	

HYDRAULICS **...CONTINUED**

Description	Details	Part Number	Model	Picture
Lift Arm	Upper	**T29931**	2140 / 3140	
	Rockshaft Cat III (RH)	**L157537**	6000 Series	
	Rockshaft Cat III (LH)	**L157538**	6000 Series	
Load Control Kit		**AL40976**		
		AL40977	2140	
Piston Kit		**AL71018**	1140, 1850	
Screw	3/8	**R34360**	4520	
Spring Kit		**AL71016**	1850, 3140, 3650	
Shaft Kit		**AL35755**	1140, 1850, 3140, 3650 1641, 2141, 2541, 2941, 3141, 3641 2251, 2351, 2651, 2951, 3351, 3651	

Original manufacturer names, part numbers and descriptions
are quoted for reference purposes only.
It is not implied that products of Landboupart are original parts.

HYDRAULICS **...CONTINUED**

Description	Details	Part Number	Model	Picture
Transmission Oil Pump		**AL68091**	3050 Series	
Valve	Hydraulic Pump	**AL71017**	4050 Series	
	Hydraulic Pump	**AL71019**	4050 Series	

INSTRUMENTS

Description	Details	Part Number	Model	Picture
Guage; Temperature		**AL24526**	1630 / 2030	
Gauge; Fuel		**AL24294**	1630 / 2030	

Original manufacturer names, part numbers and descriptions
are quoted for reference purposes only.
It is not implied that products of Landboupart are original parts.

STEERING

Description	Details	Part Number	Model	Picture
Arm		**L27094**		
Ball Bearing		**JD8728**	1140, 1850, 1950N	
Ball Joint		**AL160543**	6630	
		AL161338	6115D, 6130D 6220, 6320, 6420 6330, 6430 6225 6403, 6603	
		AL39020	1140, 1850, 1950N	
Ball Joint		**AL39024**	1140, 1850, 1950N	
	LH	**AL39315**	3140 3141, 3641	
	RH	**AL39318**	3140 3141, 3641	

Original manufacturer names, part numbers and descriptions
are quoted for reference purposes only.
It is not implied that products of Landboupart are original parts.

STEERING **...CONTINUED**

Description	Details	Part Number	Model	Picture
Ball Joint	LH	**AL58013**	2541, 2941 3140 3141, 3641 3350 3351, 3651	
	RH	**AL58014**	2541, 2941 3140 3141, 3641 3351, 3651	
	LH	**AL68254**		
	RH	**AL68255**		
Bushing		**T21445**	1140	
Gasket		**T21527**		
	Shift Collar	**T21528**	1140	
Seal		**T22260**	1140, 1850, 1950N 2351	

STEERING **...CONTINUED**

Description	Details	Part Number	Model	Picture
Shaft		**AT20372**	1140	
Snap Ring		**F215R**	1140, 1850, 1950N	
Steering Wheel		**AL28458**	1140, 1850, 1950N, 3140 3141, 3641 2651, 2951, 3351, 3651	
Tie Rod		**AL37259**	3140	
Tie Rod End		**AL160542**	6630	
		AL161341	6115D, 6130D, 6215 6220, 6320, 6420 6225, 6330, 6430 6403, 6603	
		AL168703	3140	
		AL27532		

STEERING **...CONTINUED**

Description	Details	Part Number	Model	Picture
Tie Rod End		**AL27533**		
		AL37523	3140	
		AL38644		
	NSK Brand	**AR55286**	3130 / 3140	
Tie Rod End		**AT27134**	1140	
Washer		**T22482**	1140, 1850, 1950N 1641	

LBP LANDBOUPART

www.landboupart.com

COMBINE • ENGINE • TRACTOR • GROUND ENGAGING • PARTS

TRACTOR - LANDINI
AFTERMARKET PARTS

AIR SYSTEM

Description	Details	Part Number	Model	Picture
Air Filter Housing		**3543545M91**	60 Series	
Air Hose	Dry Filter	**3546377M1**	248 Engine 236 Engine (Blue)	
		3650581M1	1004 Engine (Green)	
		3670561M1	1104 Engine	
Clamp		**3307669M91**	Series 60	
Pipe Air System		**3546371M92**	60 Series	
Silencer		**3530335M91**	All Engines	
		6502899M92 3307507M91	248 Engine 236 Engine (Blue) 1104 Engine	

BODY

Description	Details	Part Number	Model	Picture
Bonnet		**3545361M94**	Series 60 New	
		3667980M94	Series 65	
Dash		**3532637M95**	60 All	
Dash Cover		**3530477M92**	Series 60 Series 60 New Series 65	
Dash Panel	Upper	**3533551M4**	Series 60 Series 60 New Series 65	
	Bottom	**3533359M3**	60 Series	

BODY **...CONTINUED**

Description	Details	Part Number	Model	Picture
Decal	LH	**3534613M1**	60 Series	
	RH	**3534614M1**		
	LH	**3534615M1**	Series 60	
	RH	**3534616M1**		
	LH	**3652380M1**	Series 60 New Series 65	
	RH	**3652381M1**		
Grill	Top	**3304790M91**	Series 60	
		3542260M1	Series 60 New	
		6506427M1	Series 65	
	Bottom	**3304773M91**	Series 60	
		3542243M1	Series 60 New	
		6506428M1	Series 65	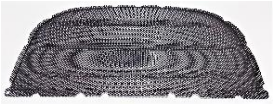

BODY **...CONTINUED**

Description	Details	Part Number	Model	Picture
Grill	One Piece	**3668013M1**	Series 60 New Series 65	
		3668000M91		
	Middle	**3304777M91**	Series 60	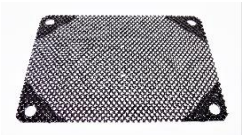
Grill Strap	Front	**3546863M1**	Series 60 New Series 65	
	Rear	**3304821M1**	Series 60 Series 60 New Series 65	

BRAKES

Description	Details	Part Number	Model	Picture
Brake Actuator	(2)	**3308792M91**	Series 60 Series 60 New Series 65	
Brake Disc	Friction (10)	**3550896M1**	Series 60 Series 60 New Series 65	

BRAKES **...CONTINUED**

Description	Details	Part Number	Model	Picture
Brake Disc	Steel (6)	**3308296M1**	Series 60 Series 60 New Series 65	
Brake/Clutch Pedal Bush		**1423482M1**	Series 60	
Brake Pipe	Flexible	**3551462M91**	Alpine Landpower Legend	
Brake Seal		**1860959M1**	Series 60 Series 60 New Series 65 Super Series	
Spring; Brake Pedal		**981843M3**	60 Series	

CLUTCH

Description	Details	Part Number	Model	Picture
Clutch Plate	11" Button	**3311325M91**	Series 60, 70, 80 Atlas PowerFarm	
	11" Facing	**3311538M92**	Atlas Old 60	

CLUTCH **...CONTINUED**

Description	Details	Part Number	Model	Picture
Clutch Plate	12"	**3311942M91** 3105232M91	Atlas/Global/Power Series 60 Series 60 New Series 65	
	14"	**3540443M91**	Legend	
Collar Assy		**1423471M92**	Series 60	
Hose	R/Brg Housing	**1824745M91**		
Pressure Plate	12"	**3540478M92** **3532193M94** 6521050M91	Power/Global Series 60 Series 60 New Series 65	
	14"	**3559804M91**	LandPower Legend	
PTO Plate		**3311943M91**	Atlas/Global/Power Series 60 Series 60 New Series 65 Series 70, 80 Rex Techno T2, T3	

CLUTCH **...CONTINUED**

Description	Details	Part Number	Model	Picture
PTO Plate	11"	**1424135M93**	60 /Atlas	
	14"	**3541380M91**	LandPower Legend	
Pilot Bearing		**3670612M1**	Series 60 Series 60 New Series 65	
		339599M91	60 All	
Thrust Bearing	Main	**1423473M94**	Series 60 Series 60 New Series 65	
		3549201M91	LandPower Legend	
	PTO	**1442381X1**	Series 60 Series 60 New Series 65	
Cylinder	Master Clutch	**3558552M91**	LandPower Legend	

CLUTCH **...CONTINUED**

Description	Details	Part Number	Model	Picture
Cylinder	Slave	**3552715M91**	LandPower Legend	
Cable		**6606623A1** 3672806A1	Series 60 Rex Techno Rex	
Lever; Clutch Kit		**1427880M91**	Series 60	
Seal; Oil		**3015186X1**	LandPower Legend	

COOLING

Description	Details	Part Number	Model	Picture
Cowling		**3543514M4**	From Serial 60 Series	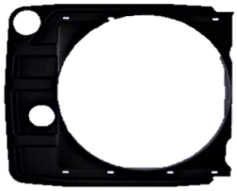
Hose	Top	**1824633M1**	248 Engine	
		3545853M1	236 Engine (Blue)	
		3649365M1	1004 Engine (Green)	

COOLING **...CONTINUED**

Description	Details	Part Number	Model	Picture
Hose	Top	**3673273M1**	1104 Engine	
Hose	Bottom	**3550411M2**	248 Engine 236 Engine (Blue)	
		3649081M1	1004 Engine (Green)	
		3673262M1	1104 Engine	
Fan Belt	To Serial Replacement	**2614B642**	Series 60	
	From Serial Replacement	**2614B644**		
Pipe	To hose	**1825165M1**	Series 60	
Radiator		**3307942M97**	Series 60	
		3680198M91	236 Engine (Blue) 1004 Engine (Green)	
Radiator Cap		**1824628M91**	All Engines	

COOLING **...CONTINUED**

Description	Details	Part Number	Model	Picture
Radiator Fan	6 Blade Steel	**3538983M91**	248 Engine	
	6 Blade Steel	**3651241M91** 3681315M91	236 Engine (Blue) 1004 Engine (Green) 1104 Engine	
	5 Blade Plastic	**3671679M91**	1104 Engine	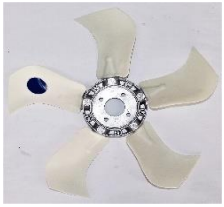
Radiator Fan	B Power 7 Blade Steel	**3683678M1**	LandPower	
Water Pump	B Power	**3689073M1**	LandPower	

ELECTRICAL

Description	Details	Part Number	Model	Picture
Alternator		**3477851M91**	Series 60 Series 60 New	
		3693247M91	Series 65 Super Series	
		3691705M93	LandPower T3 B Power	
Starter		**3667037M91**	Series 65	

ENGINE

LANDINI T3 BETA POWER = NEW HOLLAND TS135A

Description	Details	Part Number	Model	Picture
Piston Ring Set		**8093881**	LandPower 165	
Piston Assy		**8094740**	LandPower 165	
Seal; Oil	B Power Rear	**6514306M1** 704687A1	Series 7	
	B Power Front	**6513391M1** 704686A1		

ENGINE **...CONTINUED**

Description	Details	Part Number	Model	Picture
Dipstick		**31787452**	Series 60	
Filler Cap Tappet Cover		**2487845**	Series 60	
Filter	Water Separator	**4215225M2**		
Flywheel	11"	**3653185M91** 1825511M1	Atlas	
Head Oil Filter		**37764181**	Series 60	
Tappet Cover		**37188141**	Series 60	
Washer	B Power	**3688754M1**	LandPower Series 7	

FRONT AXLE - 2WD

Description	Details	Part Number	Model	Picture
Bearing; Hub	2WD Inner (2)	**339394X1**	Series 60 Series 60 New Series 65	
	2WD Outer (2)	**339393X1**		
Bearing; Spindle	2WD (2)	**392060X1**	Series 60 Series 60 New Series 65	
Bolt; Front Wheel	2WD (10)	**391870X1**	Series 60 Series 60 New Series 65	
Bush	2WD Front Axle	**1423636M1**	Series 60 Series 60 New Series 65	
Bush; Spindle	2WD (4)	**975208M1**	Series 60 Series 60 New Series 65	
Cap; Hub	2WD	**1433401M1**	Series 60 Series 60 New Series 65	

FRONT AXLE - 2WD **...CONTINUED**

Description	Details	Part Number	Model	Picture
Front Support	2WD	**3532645M6**	60 Series	
		3532646M8	Series 60 Series 60 New	
Nut; Hub Spindle	2WD (2)	**1440252X1**	Series 60 Series 60 New Series 65	
Pin	2WD Front Axle	**1423630M2**	Series 60 Series 60 New Series 65	
Seal; Hub	2WD (2)	**394014X1**	Series 60 Series 60 New Series 65	
Spindle	2WD LH & RH	**1424578M94**	Series 60 Series 60 New Series 65	
Washer; Centre Pin		**1423631M1**	Series 60	

FRONT AXLE - 2WD **...CONTINUED**

Description	Details	Part Number	Model	Picture
Washer; Hub Lock	2WD (2)	**3304452M1**	Series 60 Series 60 New Series 65	
Washer; Spring		**1440316X1**	Series 60	

FRONT AXLE - 4WD

Description	Details	Part Number	Model	Picture
Bearing	4WD High Clearance	**3426851M2**	Series 60	
Bearing; Axle	Big	**3426850M2**	Series 60 Series 60 New	
		3658667M1	Series 60 New Series 65	
	Small Inner (2)	**3429001X1**	Series 60	
		3668301M1	Series 60 New Series 65	

FRONT AXLE - 4WD **...CONTINUED**

Description	Details	Part Number	Model	Picture
Bearing; Carrier	4WD Inner (2)	**391339X1**	Series 60 Series 60 New Series 65	
	4WD Outer (2)	**3427462M1**	Series 60	
Bearing; King Pin	(4)	**3310930M91**	Series 60 Series 60 New Series 65	
Bearing; Knuckle	Cup / Con	**3426619M1** 4211118M91	Series 60 Atlas LandPower Large 10000	
Bush		**3426938M1**	Series 60	
Bush; Support	4WD Front Big	**3530244M1**	Series 60 Series 60 New Series 65	
	4WD Front Small	**3557975M1**	Series 60 New Series 65	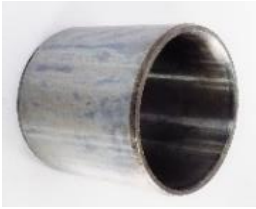

FRONT AXLE - 4WD **...CONTINUED**

Description	Details	Part Number	Model	Picture
Bush; Support	4WD Rear	**3426028M2**	Series 60 Series 60 New Series 65	
Crownwheel & Pinion	4WD (8/31)	**3654302M91** 6521990M91	Atlas GlobalFarm Mythos PowerFarm Series 60 New Series 65	
	4WD (8/31)	**3427358M91**	Series 60	
	4WD High Clearance (10/54)	**3427818M91**	Series 60	
Coupling	4WD Large	**1425213M3**	LandPower Legend	
		3531797M1	Series 60	
Front Support	4WD	**3662911M2**	Series 60 New Series 65	
King Pin		**3426523M2**	Series 60 Series 60 New	
		3557985M1	Series 60 New Series 65	

FRONT AXLE - 4WD **...CONTINUED**

Description	Details	Part Number	Model	Picture
Nut; Front Wheel	4WD (12)	**3384600M2**	Series 60 Series 60 New Series 65	
O Ring		**3015022X1**	GlobalFarm LandPower Legend	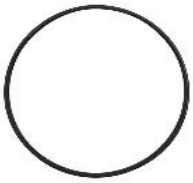
Pinion Bearing	4WD Inner	**1440642X1**	Series 60 Series 60 New Series 65	
	4WD Outer	**339481X1**	Series 60 Series 60 New Series 65	
	4WD Outer High Clearance	**339394X1**	Series 60	
Pinion Nut	4WD	**4205521M1**	Series 60 Series 60 New Series 65	
	4WD High clearance	**3426023M1**	Series 60	
Pinion Seal	4WD (55x82x9,2)	**3019967X1**	Series 60	
	4WD (55x82x16,5)	**3428942M1**	Series 60 Series 60 New Series 65	

FRONT AXLE - 4WD **...CONTINUED**

Description	Details	Part Number	Model	Picture
Shim	0.10mm	**3428923M1**	Series 60	
	0.15mm	**3426511M1**		
		3428924M1		
	0.30mm	**3426512M1**		
		3428925M1		
	0.50mm	**3426513M1**		
		3428926M1		
	0.70mm	**3426514M1**		
	1.00mm	**3426515M1**		
Seal; King Pin	(4)	**3009744X1**	Series 60	
		3656674M1	Series 60 New Series 65	
	High Clearance (4)	**371153X1**	Series 60	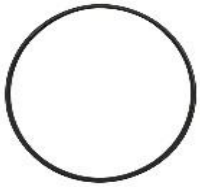

FRONT AXLE - 4WD **...CONTINUED**

Description	Details	Part Number	Model	Picture
Seal; Side Shaft	Inner (4)	**3428064M1**	Series 60	
		3428090M1	Series 60 New Series 65	
	Outer (2) 165x190x15,5/17	**3015376X1**	Series 60 New Series 65	
	Outer (2) 165x190x15,5/16	**3696866M2**	Series 65	
	Outer (2)	**3429004X1**	Series 60	
Spider		**1423444M1**	Series 60	
Spider Gear Kit	4WD	**3429476M92**	Series 60 Series 60 New	
		3558004M91	Series 60 New Series 65	

FRONT AXLE - 4WD **...CONTINUED**

Description	Details	Part Number	Model	Picture
Stud; Front Wheel	4WD (12)	**1434760M1**	Series 60	
Washer		**390974X1**	Series 60	

FUEL SYSTEM

Description	Details	Part Number	Model	Picture
Cable; Stop		**3536141M92**	Series 60	
Cable; Throttle	Hand	**3542535M91**	248 Engine 236 Engine (Blue) 1004 Engine (Green)	
	Round Head	**3682634M91**	1104 Engine	
	Hook Head	**3684476M91**	1104 Engine	

FUEL SYSTEM **...CONTINUED**

Description	Details	Part Number	Model	Picture
Cap; Diesel Tank		**3307650M91**	All Engines Super Series	
Fuel Lift Pump	B Power	**6507275M91**		
Fuel Lift Pump Piece	B Power	**3688650M1**	LandPower Series 7	
Fuel Tank		**3532847M95**	60 Series	
O-Ring	Green	**3688690M1**	Landpower PowerMaster Series 7	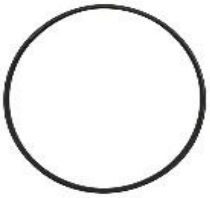
Sender Unit; Diesel Tank		**3530230M92**	All Engines	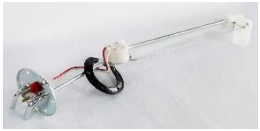

GEARBOX

Description	Details	Part Number	Model	Picture
Ball; Gearbox Rail		**361031X1**	60 Series	
Ball; Steel	16 Spd 12 Spd	**1444586X1**	Series 60	
Bearing		**1440494X1**	Series 60	
		1443559X1	Series 60 Series 60 New Series 65	
		1440558X1		
		831789M1		
		4207427M1		
		3015037X1		

GEARBOX **...CONTINUED**

Description	Details	Part Number	Model	Picture
Bearing		**1440562X1**	Series 60 Series 60 New Series 65	
		3530755M1		
	12 Spd	**3015010X1**	60 All	
		3534375M1	60 Series	
Bearing; Needle	(2)	**395567X1**	Series 60 Series 60 New Series 65	
		3530720M1		
		3308392M1		

GEARBOX **...CONTINUED**

Description	Details	Part Number	Model	Picture
Bearing; Needle		**1441925X1**	Series 60 Series 60 New Series 65	
Boot	Gear Lever	**1824689M1**	Alpine	
		3530683M92	Series 60	
Bush	12 Spd	**3538938M1**	60 Series	
Cable	Manual Shuttle	**3557787M93**	LandPower Legend	
Clip; Gear Lever		**1824691M1**	Series 60	
Dowel; Gear Lever		**390244X1**	Series 60	
Ferrule		**3530542M1**	Series 60	
Gasket; Release Bearing		**3305041M2**	Series 60	

GEARBOX **...CONTINUED**

Description	Details	Part Number	Model	Picture
Gear Lever		**3532936M1**	60 Series	
		3532937M2	60 Series	
		3535038M1	60 Series	
Hub	12 Spd	**3534556M1**	60 Series	
		3539426M1		
Knob; Gear Lever		**3532886M93**	60 Series	
		3532945M92	60 Series	
		3534444M92	60 Series	
		3663938M91	PowerFarm Rex	

GEARBOX **...CONTINUED**

Description	Details	Part Number	Model	Picture
Neutral safety switch		**3533170M92**	Series 60 Series 60 New Series 65	
O-Ring	12 Spd	**3019919X1**	Series 60	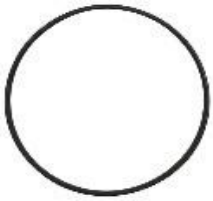
		365513X1	Atlas PowerFarm Rex	
Pinion Bearing	Rear	**1440640X1**	Series 60 Series 60 New Series 65	
	Front	**3532345M91**		
PTO Engagement Coupler		**3307885M1**	Series 60 Series 60 New	
		3691665M1	Series 65	
PTO Engagement Lever		**1423687M3**	Series 60 Series 60 New Series 65	
PTO Engagement Lever Dog		**974436M2**	Series 60 Series 60 New Series 65	

GEARBOX **...CONTINUED**

Description	Details	Part Number	Model	Picture
PTO Engagement Shaft	With mechanical reverse device	**6506064M1**	Series 65	
	1 Bearing	**3307884M1**	Series 60 Series 60 New	
	2 Bearings	**3309364M2**		
PTO Engagement Shaft Needle Bearing		**1442537X1**	Series 60 Series 60 New Series 65	
PTO Shaft		**3543737M2**	Series 60 Series 60 New	
		3690972M1	Series 65	
PTO Shaft Bearing		**831789M1**	Series 60 Series 60 New Series 65	

GEARBOX **...CONTINUED**

Description	Details	Part Number	Model	Picture
Ring	12 Spd	**3534405M1**	60 Series	
		3685183M1	PowerFarm Series 5	
Seal	12 Spd	**3308393M1**	Series 60	
		973454M1		
		392184X1		
Seal; Oil		**3019952X1**	Series 60	
		3676569X1	LandPower Legend	

GEARBOX **...CONTINUED**

Description	Details	Part Number	Model	Picture
Sleeve	12 Spd	**3538530M1**	60 Series	
		3539422M1		
Solenoid		**3665591M91**	LandPower Legend PowerFarm	
Spring	12 Spd	**3533975M1**	60 Series	
		3539425M1		
Spring Gear Lever		**1824690M2**	Series 60	
Spring Gearbox Rail		**3305061M1**	Series 60	
Syncro	12 Spd	**3530550M94**	Series 60	
		3538531M1		
		3539428M1		

HYDRAULICS

Description	Details	Part Number	Model	Picture
Bearing		**1440488X1**	Series 60	
Bolt		**3015140X1**	Series 60	
Cable	Auxillary	**3558693M92**	LandPower Legend	
Cross Shaft		**3307249M1**	Series 60 Series 60 New Series 66	
Cross Shaft Arm	RH	**3303262M92**	Series 60 Series 60 New Series 65	
	LH	**3303275M92**		
Cross Shaft Bush	LH	**1819841M1**	Series 60 Series 60 New Series 67	
	RH	**1825272M1**	Series 60 Series 60 New Series 68	
Cross Shaft O-Ring	LH	**835126M1**	Series 60 Series 60 New Series 69	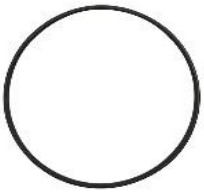
	RH	**1001464M1**	Series 60 Series 60 New Series 70	

HYDRAULICS **...CONTINUED**

Description	Details	Part Number	Model	Picture
Cross Shaft Ring		**3535354M1**	60 Series	
Draft Control Disc		**3532803M2**	60 Series	
Draft Control Grip		**3303876M2**	Series 60	
Draft Control Knob		**3532807M91**	60 Series	
Draft Control Slider		**3532799M1**	60 Series	
		3532800M91	60 Series	
Draft Control Spacer		**3532804M1**	60 Series	

HYDRAULICS **...CONTINUED**

Description	Details	Part Number	Model	Picture
Filter	Under pump	**3307250M91**	Series 60	
	Away from pump	**3530223M93**	Series 60 New Series 65 Super Series	
Hydraulic Damper Spring		**3307673M1**	Series 60 Series 60 New Series 65	
Hydraulic Pump		**3549614M91**	12500/14500	
		3533910	60 Series	
		3534941M91	60 Series	
		3536740M91	10000, 13000	
	Filter under pump	**3539857M91**	Series 60	

HYDRAULICS **...CONTINUED**

Description	Details	Part Number	Model	Picture
Hydraulic Pump	Filter away from pump	**3543134M91**	Series 60 New Series 65 Super Series	
		3661228M91	GlobalFarm PowerFarm **Mc Cormick C-Max**	
	Electrical B Power	**4212879M91**	LandPower T3	
	Mechanical B Power	**4212880M91**	LandPower T3	
Hydraulic Pump	12CC/REV 4 MTG	**800402020B**	Old Solis	
	22CC	**803402044A**	Solis 4100TL OLD + WILDTRAC	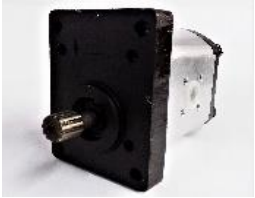
	Double	**3552261**	Legend LandPower	

HYDRAULICS **...CONTINUED**

Description	Details	Part Number	Model	Picture
Hydraulic Pump	Double	**3655100**	Atlas	
		3540438M92	12500/14500	
		3652099M91	PowerFarm Rex	
	With Valve	**3540970M91**	8500	
Hydraulic Pump Gear		**982209M2**	Series 60	
	Filter under pump	**3302107M2**	Series 60	
	Filter away from pump	**1695001M2**	Series 60 New	

HYDRAULICS **...CONTINUED**

Description	Details	Part Number	Model	Picture
Hydraulic Pump Gear	Filter away from pump	**3671697M3**	Series 65	
Link	Bottom	**3532132M91**	Series 60 Series 60 New Series 65	
O-Ring		**3019915X1**	Series 60	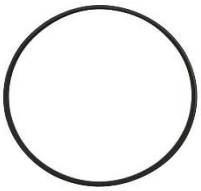
		3673221M2	GlobalFarm PowerFarm Rex	
		3673222M1	GlobalFarm LandPower Legend PowerFarm	
		371468X1	Series 60	
Ram Cylinder Shaft		**1425326M1**	Series 60	
Ram Piston		**1825284M1**	Series 60 Series 60 New Series 65	
Ram Piston Backup Ring		**395590X1**	Series 60 Series 60 New Series 66	

HYDRAULICS **...CONTINUED**

Description	Details	Part Number	Model	Picture
Ram Piston O-Ring		**3019929X1**	Series 60 Series 60 New Series 67	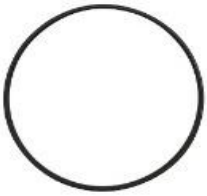
Spacer		**3530411M1**	Series 60	
		3530412M1		
Valve; Discharge	18mm	**3306227M92**	6030, 6040	

INSTRUMENTS

Description	Details	Part Number	Model	Picture
Brake Light Switch		**3532018M91**	Series 60 Series 60 New Series 65	
Box		**3533900M91**	Series 60	
Cluster	30km/h	**3533146M93**	Series 60 Series 60 New	
		3683883M91	Series 65	
	40km/h	**3538086M93**	Series 60	

INSTRUMENTS **...CONTINUED**

Description	Details	Part Number	Model	Picture
Hazzard Switch		**3534537M91**	Series 60 New Series 65	
	Cobo	**3533922M91**	Series 60 Series 60 New Series 65	
Ignition Switch		**3654627M91**	Series 60	
		3547633M91	Series 60 New Series 65	
		3678781M91	GlobalFarm LandPower PowerFarm Super Series	
		3687868M1	Rex LandPower	
Indicator Switch		**3533174M92**	Series 60 Series 60 New Series 65	
Lever	Fwd / Rev RPS	**3660863M91**	PowerFarm Rex	

INSTRUMENTS **...CONTINUED**

Description	Details	Part Number	Model	Picture
Light Switch		**3534531M91**	Series 60 Series 60 New Series 65	
		3534534M91	Series 60	
		3534588M91	Series 60 New Series 65	
		3534590M91	Series 60	
Oil Pressure Switch	B Power	**4208240M1**	LandPower	
PTO Control Switch		**3304290M91**	Series 60 Series 60 New Series 65	
PTO Slow/Fast Switch		**3669450M91**	Series 60 Series 60 New Series 65	

INSTRUMENTS **...CONTINUED**

Description	Details	Part Number	Model	Picture
Sender Unit	B Power	**4217672M1**	LandPower	
	Temperature	**1877731M92**	Series 60 Series 60 New Series 65	
Switch		**3534628M1**	60 Series	
Switch Ind		**3530225M92**	Series 60	

LIGHTS

Description	Details	Part Number	Model	Picture
Headlight	Round	**3305625M92**	Series 60	
	Square	**3550746M91**	Series 60 Series 60 New Series 65	

LIGHTS **...CONTINUED**

Description	Details	Part Number	Model	Picture
Indicator Light	Front	**3533894M91**	Series 60 Series 60 New Series 65	
		3539694M91	60 Series	
	Rear	**3536200M91** **1695847M91**	Series 60 Series 60 New Series 65	

REAR AXLE

Description	Details	Part Number	Model	Picture
Bearing; Crownwheel & Pinion Carrier		**339439X1**	Series 60 Series 60 New Series 65	
Crownwheel & Pinion	(9/44)	**3530579M91**	Series 60 Series 60 New Series 65	
Gear		**1423574M2**	Series 60	
		3307224M1		
Pinion Nut		**3307883M1**	Series 60 Series 60 New Series 65	

REAR AXLE **...CONTINUED**

Description	Details	Part Number	Model	Picture
Shim	0.9mm	**3534126M1**	Series 60	
	1.0mm	**3534127M1**		
	1.1mm	**3534128M1**		
	1.2mm	**3534129M1**		
	1.3mm	**3534130M1**		
	1.4mm	**3534131M1**		
	1.5mm	**3534132M1**		
	1.6mm	**3534133M1**		
	1.7mm	**3534134M1**		
Side Shaft	(2)	**3304841M2**	Series 60	
	RH	**3531900M2**	Series 60 New Series 65	
	LH	**3531901M2**		
Side Shaft		**3531955M2**	60 Series	

REAR AXLE **...CONTINUED**

Description	Details	Part Number	Model	Picture
Side Shaft Bearing	Inner (2)	**1440644X1**	Series 60	
		3019932X1	Series 60 New Series 65	
		390876X1	Series 60 Series 60 New Series 65	
	Outer (2)	**339439X1**		
		1441406X1		
Side Shaft Gear		**3531957M2**	Series 60 Series 60 New Series 65 Atlas PowerFarm	
Side Shaft Seal	Inner (4)	**1442216X1**	Series 60	
		392190X1	Series 60 New Series 65	
	Outer (2)	**975127M1**	Series 60	
		3019954X1	Series 60 New Series 65	
	Outer	**3539750M91**	Series 60 Atlas	
Stud		**975124M1**	Series 60	
Washer; Lock		**1423579M2**	Series 60	

STEERING

Description	Details	Part Number	Model	Picture
Bottle		**3530018M92**	Series 60 New Series 65	
Sensor		**3689671M1**	LandPower PowerFarm Rex Series 5	
Steering Cylinder	2WD	**1605172M91**	Series 60	
		3686185M94	Series 60 New Series 65	
Steering Cylinder	4WD	**3426826M92**	Series 60 Series 60 New	
		3652586M91	Series 60 New Series 65	
Steering Filter		**3300901M91**	Series 60 New Series 65 Super Series	

STEERING **...CONTINUED**

Description	Details	Part Number	Model	Picture
Steering Obitrol		**3305002**	Series 30 Series 10000	
		3552545	Legend LandPower	
	2WD	**3305003M92**	Series 60 Series 60 New Series 65	
	4WD	**3670785M91**		
		1809696M91	30/40/50/60 Prima Series 40, 50, 500 Large 10000 Series	
Steering Pump		**803402027A**	Solis	
		3539858M91	Series 60 Series 60 New Series 65	

STEERING **...CONTINUED**

Description	Details	Part Number	Model	Picture
Steering Wheel		**3303415M91**	Series 60 Series 60 New Series 65	
Knuckle	18/18mm	**3428268M1**	Series 60 New Series 65	
Tie Rod End	2WD (4)	**1821234M91** **884701M92**	Series 60 Series 60 New Series 65	
	4WD 18mm - 175mm (measured from back of head)	**3426336M1**	Series 60	
	High clearance 18mm - 220mm (measured from back of head)	**3426313M1**	Series 60	
	20mm+300 20mm - 245mm (measured from back of head)	**3666657M91**	LandPower	

THREE POINT

Description	Details	Part Number	Model	Picture
Fork & Yoke		**3532627M91**	Series 60 Series 60 New Series 65	
Fork & Yoke	Complete	**3536710M91**	Series 60	

THREE POINT **...CONTINUED**

Description	Details	Part Number	Model	Picture
Leveling Box		**3670220M91**	Series 60 Series 60 New Series 65	
Lift Cylinder Kit		**3314981M91**	Series 60 Atlas GlobalFarm PowerFarm Rex	
Link	Lower	**3533293M91**	60 All Atlas PowerFarm	
Pin		**1825431M3**	Series 60	
		3667795M91		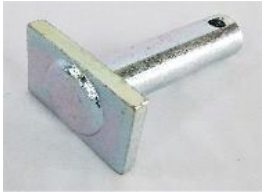
Stabilizer		**3532084M93**	Series 60 Series 60 New Series 68	

WHEEL

Description	Details	Part Number	Model	Picture
Bolt	Rear Wheel	**391881X1**	60 Series	
Lux	Rear Wheel	**3531377M1**	60 Series	
Nut	Rear Wheel	**392501X1**	60 All	
Screw	Rear Wheel	**3019904X1**	60 Series	
		3557222M1	Series 60 Series 60 New Atlas LandPower Legend	
	Front / Rear Wheel	**3542266M1**	Series 60 Atlas GlobalFarm	
		395542X1	Series 60	

WHEEL **...CONTINUED**

Description	Details	Part Number	Model	Picture
Screw Wheel Rail	Rear Wheel	**3531379M1**	Series 60 Atlas Large Legend	
Spacer	Rear Wheel	**1425939M1**	Atlas GlobalFarm LandPower	
Stop Wheel Rail	Rear Wheel	**3531378M1**	Series 60 Atlas Large Legend	
Stud for Wheel	Rear Wheel	**3536738M2**	Series 60	

LANDBOUPART

www.landboupart.com

COMBINE • ENGINE • TRACTOR • GROUND ENGAGING • PARTS

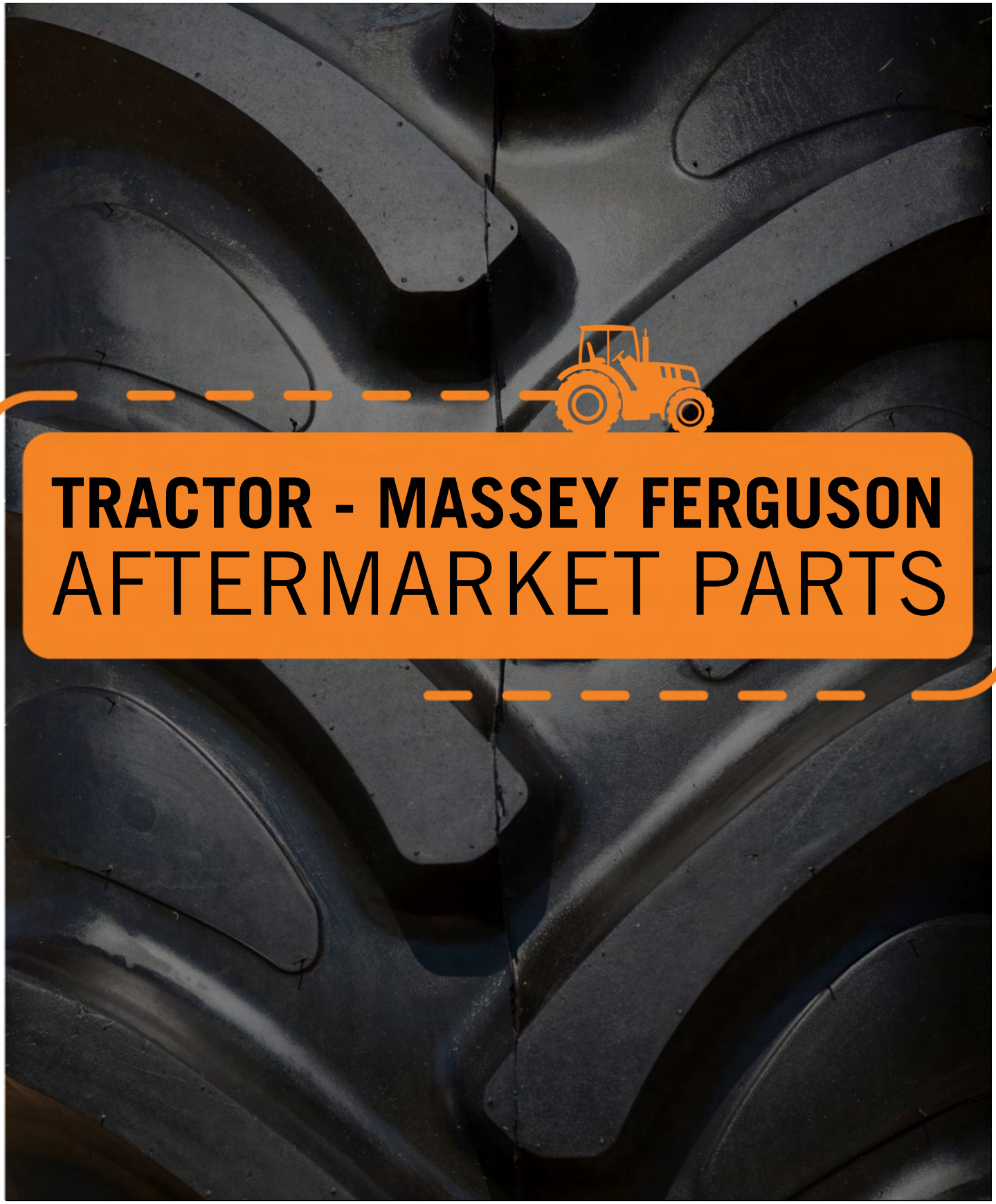

TRACTOR - MASSEY FERGUSON
AFTERMARKET PARTS

AIR SYSTEM

Description	Details	Part Number	Model	Picture
Exhaust Elbow		**897914M1**	203	
		898011M1	35/135	
		1865534M1	135/240	
		1862807M1	212/236/248	
		1874771M2	440	
	180 inch	**897913M1**	165/175/178	
Exhaust Manifold		**374874M1**		

AIR SYSTEM **...CONTINUED**

Description	Details	Part Number	Model	Picture
Exhaust Manifold		**37781251** 37781341	35x/135	
		37781571	135/240	
		37781781	212/236/248	
Exhaust Manifold Stud & Nut		**0576064**		
		826232		
Gasket	Exhaust Elbow	**36862135**	180	
		194742M1	212/236/248	
		827877M1	35x/135/240	

AIR SYSTEM **...CONTINUED**

Description	Details	Part Number	Model	Picture
Gasket	Exhaust Manifold	**36862143**	152	
Exhaust Pipe	Horizontal	**890312M1**	35/135/240	
	Vertical	**1696603M3**	300 Series	
Filter Assy		**1678292M91**	290	
Hose	Air Cleaner	**884546M1**		
		1876307M1		
	Air Cleaner Dry	**884545M1**	165/168/185	

AIR SYSTEM **...CONTINUED**

Description	Details	Part Number	Model	Picture
Hose	Air Cleaner to Inlet	**1682648M1**	200 Series 236 248	
Hose	Oil Bath To Inlet	**890258M1**	35x	
		898104M1	135	
		883679M1 **883680M1**	165 188	
		1861746M1	240	
Inlet Manifold		**37786301**	135/240	
		37787654	212/236/248	
Muffler	Under Hood	**1694961M5**	365 375	

AIR SYSTEM **...CONTINUED**

Description	Details	Part Number	Model	Picture
Muffler	Under Hood Elbow = Side	**1694963M5**	390 398	
	Under Hood Elbow = Bottom	**1694965M6**	399SE	
	Under Hood	**3614956M91**	399	
Oil Bath		**1886673M93**	35x 135	
		898390M1	165 188	
		1662276M93		
Oil Bath Element		**1886670M1**	35 135	
		1850546M1	165 188	
		35211	240	

AIR SYSTEM **...CONTINUED**

Description	Details	Part Number	Model	Picture
Pre Cleaner	Pipe Size = 76mm	**1693129M1**	300 Series	
	Pipe Size = 63.5mm	**1682798M1**	100/200 Series	
	Pipe Size = 76mm	**3380636M1**	6-354	
	Pipe Size = 2 ¼"	**3761802M1**	400 Series	
	Pipe Size = 180mm	**1508881M1**	300 Series	
	Pipe Size = 6"	**3473919M1**	100/200 Series	
	Pipe Size = 10"	**3639424M1**	6-354	
	Mushroom	**893226M91**	35/135	
		022188T1		
Silencer	Horizontal	**890476M93**	35/135/240	
	Vertical Curved	**3772138M1**		

AIR SYSTEM **...CONTINUED**

Description	Details	Part Number	Model	Picture
Silencer	Vertical Enamel	**894291M4**	35/135/240/203	
		1683796 **1684261M1**	135/240	
		898228M94	100 Series	
		1675390M92	200 Series	
		1696602M3	300 Series	
		1484528M94	400 Series	
Silencer Clamp	Exhaust	**1674071M91**		
	Exhaust 2 1/4 58mm	**1676470M91**		
Valve	Air Cleaner	**1635991M1**		

AIR SYSTEM **...CONTINUED**

Description	Details	Part Number	Model	Picture
Weather Cap		**192791M91**	236/248	
		2930045	152/203	

BODY

Description	Details	Part Number	Model	Picture
Bonnet / Hood Kit	Body Kit	**1884060K**	35x	
		1884310K	135 13"	
		3931662M91	165 175	
		3931663M91	185 188	
		1672659 **MF23-710**	240	

BODY **...CONTINUED**

Description	Details	Part Number	Model	Picture
Bonnet / Hood Kit	Body Kit	1672960 **MF23-711**	265	
		MF23-713	290	
Bonnet	Assy	**1694933M97**		
	Grey	**1884060M91**		
		1884296M96	165/168/175/185	
	Middle Piece	**1694934M97**	399	
	Bonnet RH Piece	**3700011M91**	399	

BODY **...CONTINUED**

Description	Details	Part Number	Model	Picture
Bonnet	Bonnet LH Piece	**3700010M91**	399	
	Panel Side Front RH	**3699002M91**	399	
	Panel Side Front LH	**3699006M91**	399	
Bracket	Fender 28" Tyre	**001182**		
	Fender 30" Tyre	**MF23-376**		
	Fender 38" Tyre 10 Hole	**1808644M92**		
Chin Piece	Bottom of Grill	**884059M91**	165 175 178 185 188	

BODY **...CONTINUED**

Description	Details	Part Number	Model	Picture
Cover	Battery	**1884057M94**		
Decal Set		**MF23-500**	35x	
		MF23-501 **836931M91**	135	
		MF23-503	165	
		MF23-504	175/178/185/188	
		MF23-550	240	
		3406978M92	240	
		MF23-551	265	
		3406981M91	265	
		MF23-552	275	
		3406983M92	275	
		MF23-553	285	
		1682432M1 **3406985M92**	290	
		3900320M92	365	
		3900321M92	375	
		3901083M91	390	
		3900322M92	390T	
		3900324M91	399	

BODY **...CONTINUED**

Description	Details	Part Number	Model	Picture
Decal	RH	**069067P1**	440	
	LH	**069073P**	440	
	440	**070750P1**	440	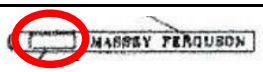
Door	Bonnet	**1885047M91**	135	
Emblem	Nose	**1860156M1**	100 Series	
	Grill	**1682944M91**	200 Series	
Fastener		**1693951M3**	300 Series	
		1693952M2	300 Series	
	Screw Grill Door	**897819M1**	100 Series	
	Handle Bonnet Top	**897793M91**	100 Series	

BODY **...CONTINUED**

Description	Details	Part Number	Model	Picture
Fastener	Handle Battery Cover	**897788M91**	100 Series	
	Handle Catch Kit Battery	**182367M1**	100 Series	
	Spring Bonnet	**828224M1**	135	
	Bonnet Clip	**898224M1**		
Fender	LH & RH	**1883356M92**	35/135	
	RH	**1884286M94**	135/240	
	LH	**1884287M94**	135/240	
	RH Square	**1679373M94**	100/200 Series	

BODY **...CONTINUED**

Description	Details	Part Number	Model	Picture
Fender	LH Square	**1679374M94**	100/200 Series	
	RH Square	**3699080M95**	300 Series	
	LH Square	**3699079M95**	300 Series	
	RH Square	**022889S**	400 Series	
	LH Square	**022888S**	400 Series	
Fender Extention	Square RH	**022886P2**		
	Square LH	**022887P2**		
Grill	Bonnet Nose	**883159M1**	100 Series	
	13" - No Lamp Holes	**1861365M91**	135	
	14" - No Lamp Holes	**1882982M92**	135	
	No Lamp Holes	**1886315M91**	100 Series	
	With Round Holes	**1682953M91**	240	

BODY **...CONTINUED**

Description	Details	Part Number	Model	Picture
Grill	With Round Holes	**1682950**	200 Series	
	Short Height = 650mm	**3701922M91**	300 Series	
	Square Holes Height = 710mm	**3701923M91**	300 Series	
	Square Holes	**065635S1**	400 Series	
	Round Holes	**6270500M91**	400 Xtra	
	Light Frame	**1694993M3**		
Grill Door	13"	**1882984M92**	135	
	14"	**1861374M91**	135	
		897960M91	188	

BODY **...CONTINUED**

Description	Details	Part Number	Model	Picture
Instrument Panel		**1861842M91**	135 / 240	
		1884364M92	165/188	
		1884365M93	165 / 188	
	Bottom	**1865760M1**	240-240S-135	
		1674119M91	265-285-290	
	Top	**1876170M2**	200 Series	
	LH	**3597336M2**	300 Series	

BODY **...CONTINUED**

Description	Details	Part Number	Model	Picture
Instrument Panel	LH	**3597366M2**	300 Series	
	RH	**3597337M2**	300 Series	
Medallion	Plastic	1865460M1 **882903M2**	135	
		1866946M1	165	
		886702M1	178	
		1866947M1	185	
		MF23-306	188	
Moulding		**1694994M1**	300 Series	
		1694996M1	300 Series	
Nose Weight	27kg	**893555M1**		
Panel		**1696681M5**		

BODY **...CONTINUED**

Description	Details	Part Number	Model	Picture
Panel	Bottom of Grill	**1882985M1**	135	
	Front Grill Bottom	**1886316M2**	165/175/178/185/188	
	LH	**1871738M1**	135	
	RH	**1871737M1**	135	
	Front LH	**1672787M1**	240	
	Front RH	**1672786M1**	240	
	Front LH	**1669667M95**	200 Series	
	Front RH	**1669666M94**	200 Series	

BODY **...CONTINUED**

Description	Details	Part Number	Model	Picture
Panel	RH Grey	**897823M1**	135	
	LH of Grill	**1882986M1**	135	
	RH of Grill	**1882987M1**	135	
	RH of Grill	**880256M93**	100 Series	
	LH of Grill	**880257M93**	100 Series	
	RH of Battery	**1883373M1**	100 Series	
	LH of Battery	**1883374M1**	100 Series	

BODY **...CONTINUED**

Description	Details	Part Number	Model	Picture
Panel	Battery Cover	**1884366M92**	100 Series	
	Hood	**1885049M91**	188	
	Side LH	**3700008M91**	300 Series	
	Side RH	**3700009M91**	300 Series	
	RH of Grill	**065737S**	400 Series	
	LH of Grill	**065736S**	400 Series	
Seat	Adjustable + With Arms	**1674049M91**	Universal	
		3817644M92	5460	
	Black Front / Back Without Arm Angle	**ST01-180**		

BODY **...CONTINUED**

Description	Details	Part Number	Model	Picture
Seat	Black Front/Back + Arm + Angle	**ST01-220**		
Strap	Between Bonnet & Dash Hood	**1874520M91**	200 Series	
Support	LH	**1871728M91**	135	
	RH	**1871727M91**	135	
Wrapper Assembly		**1678139M93**	200 Series 265 275 290	
		1682961M93	240	
		3698977M92	300 Series	

BODY **...CONTINUED**

Description	Details	Part Number	Model	Picture
Wrapper Moulding	Between Wrapper & Bonnet	**1672823**	240	
		1876153M1	200 Series 265 275 290	

BRAKES

Description	Details	Part Number	Model	Picture
Brake Caliper	Dry Brake	**764805**	175/178	
	Wet Brake (2x)	**1860963**	100 200 400 Series	
	Wet Brake (2x) LH	**3596776M91**	300 Series	
	RH	**3596778M91**	300 Series	

BRAKES **...CONTINUED**

Description	Details	Part Number	Model	Picture
Brake Caliper Spring	Dry	**1005510M1**		
Brake Boot	Dry Brake	**183462M1**	175/178	
	Wet Brake (2x)	**1860959M1**		
Brake Disc	Dry Brake	**1884029M1**	165	
		1753117M91	175/178	
	Brass Wet Brake (10x)	**1860964M2**	100 200 300 400 Series	
	Steel Wet Brake (6x)	**1860965M2** 035670T	100 200 300 400 Series	

BRAKES **...CONTINUED**

Description	Details	Part Number	Model	Picture
Brake Disc	Brass	**3823952M1**	400 Series 400 Xtra	
Brake Master Cylinder	Tangential Brakes To S08142 ID 0.62"	**3596785M92** *	300 Series	
	Concentric Brakes ID 0.70"	**3595504M2** @	300 Series	
	3x Pipe Fitting	**3614780M91** #	300 Series	
		061646T1	440 Xtra	
		3810587M95	5460 / 4200 Series	
Brake Cylinder Seal Kit		**1810917M94**		
	ID 0.62"	**1810936M91** *	300 Series	

BRAKES **...CONTINUED**

Description	Details	Part Number	Model	Picture
Brake Cylinder Seal Kit	ID 0.70"	**1810849M91 @**	300 Series	
		1811086M91 #	300 Series	
Brake Pedal Shaft	Long	**180444M1**	35/65/100 & 200 Series	
	Short	**180449M1**	35/65/100 & 200 Series	
		1860802M1	35X/65/135/240	
Brake Rod	Dry Brake	**184334M1**	175/178	
	Wet Brake (2x)	**1861676M91**	100 200 400 Series	

BRAKES **...CONTINUED**

Description	Details	Part Number	Model	Picture
Brake Seal	LH	**1694264M91**		
	RH	**1694265M91**		
Brake Shaft Bush		**180801M1**	35/65/100 & 200 Series	
		195910M1	35/65/100 & 200 Series	
Brake Shoe		**1810517M92**	35X/135/240	
Brake Shoe Spring		**1850217M1**	35X/135/240	

BRAKES **...CONTINUED**

Description	Details	Part Number	Model	Picture
Hand Brake Cable	1377mm LH	**1696649M91**		
	1097mm RH	**1696648M91**		
	1527mm LH	**3595763M91**		
	1247mm RH	**3595762M91**		
		3596775M92	200/300 Series	
	LH	**3596773M92**		
	RH	**3596772M92**		

BRAKES **...CONTINUED**

Description	Details	Part Number	Model	Picture
Drum	Dry Brake	**827707M5**	135/240	
Dust Cover Kit	Wet Brake LH	**1810992M91**	300 Series	
	Wet Brake RH	**1810993M91**	300 Series	
Gasket	Brake Housing	**1860960M2**	100 / 200 Series	
Hand Brake	Complete	**3823545M91**	200/300 Series	
		1871610M91	200 Series	
		3823544M91	4200 Series	

BRAKES **...CONTINUED**

Description	Details	Part Number	Model	Picture
Slave Cylinder	LH	**3477380M91**	300 Series	
	RH	**3477381M91**	300 Series	
Slave Cylinder Seal Kit		**1810881M91**		
Slave Cylinder Rod		**3596780M1**	300/4200 Series	
Spring	Wet Brake	**1868691M1**	100/200 Series	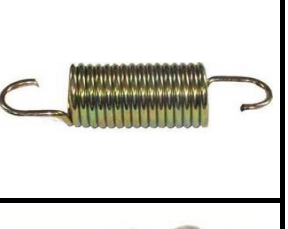
Brake Switch		**3762867M91**	300/43/53	
Tank	Brake	**1696930M4**		

CLUTCH

Description	Details	Part Number	Model	Picture
Back Plate	12" Pressure Plate	**3477544M1**		
Bearing	Clutch Pedal	**1694687M1**	300 Series	
Bolt	Clutch Finger	**1853164M1**		
		3147178M1	400 Series	
Bush	Clutch Pedal	**184592M1**		
Carrier	Release Bearing	**183129M2**		
		886727M3		

CLUTCH **...CONTINUED**

Description	Details	Part Number	Model	Picture
Clutch Kit		**6226848M91**	650/660/680 7150 / 7170	
Clutch Plate	11" CS 10SP Organic	**3620410M91** **890302M91**		
	12" CS 10SP Organic	**3599462M92** 1866042 **887889M94**		
	12" FS 25SP Organic	**3610274M92**	290	
	12" FS 25SP Dish Button	**3701008M91**		
	12" SL Button 5 Paddle	**3701009M91**		
	12" FS Sintered	**3701010M91**	285	

CLUTCH **...CONTINUED**

Description	Details	Part Number	Model	Picture
Clutch Plate	Simpson 12" Button 5	**2746A00401**	290 Xtra	
	13" FS 25SP Spring Loaded Full Ceramic	**1692759M91**	440 475 650	
	13" Spring Facing	**3599461M92**	398/399	
	13" 21 SP	**3620415M92**		
	13" FS 25SP Spring Loaded Button	**3701011M91**		
	13" FS 24SP Button 4 Lever	**041747T1**	660	
Flywheel	Simpson	**3408364M91**	240/268 Xtra	
		3906723M91 **31215851**	290 Xtra	

CLUTCH **...CONTINUED**

Description	Details	Part Number	Model	Picture
Flywheel Ring Gear	Simpson 115T	**731008M1** **0410236**	240/290 Xtra	
Fork	Release Bearing	**886719M1**		
Lever Kit	12"	**1810857M92**		
Link	11" Pressure Plate	**899817M1**	100 Series	
Lever	12" Pressure Plate	**887898M1**		
Nut	Lever	**353430X1**		
Pilot Bearing	Simpson To Serial	**828123M2**	240/290 Xtra	

CLUTCH **...CONTINUED**

Description	Details	Part Number	Model	Picture
Pilot Bearing	Simpson From Serial	**4256612M1**	240/290 Xtra	
Pin	Clutch 12"	**887897M1**		
	Clutch 11"/12"	**891826M1**		
Pivot	Clutch Pedal	**897701M92**		
		1671130M92		
Pressure Plate	11" 6 Spring Single	**1853003M95**		
	11" C/S 9SP Dual	**3620402M91**		

CLUTCH **...CONTINUED**

Description	Details	Part Number	Model	Picture
Pressure Plate	11" 6SP 10SP PTO	**3620401M91** 886384		
	11" C/S 12SP Dual	**3620403M91**		
	12" C/S 9SP Dual	**1867445M92**		
	Simpson 12" 9 Spring	**2746A00602**	268 Xtra	
	12" C/S 6 SP Dual	**1867438M92**		
	12" 12SG 25SP PTO	**3610268M91** **1868005M92**	290	
	12" 12SG 10SP PTO	**3620408M91** 887884		

CLUTCH **...CONTINUED**

Description	Details	Part Number	Model	Picture
Pressure Plate	12" 12SG 25SP Steel PTO	**3701014M92**		
	Simpson 12" 12 Spring	**1946P00101**	290 Xtra	
	13" FS 25SP Steel PTO	**3701015M91**		
	13" FS 25SP Steel PTO	**039210T1**	440 465 475 5335 5340 5365 Brazil	
	13"	**3586769M92**	440 460 475 Brazil	
	13"	**033543T1**	650	
	13" 6 Lever FS 24SP	**041746T1**	660	

CLUTCH **...CONTINUED**

Description	Details	Part Number	Model	Picture
Pressure Plate	13" Split Torque	**3620413M91**		
PTO Plate	9" CS 10SP Organic	**3620411M91** 899823		
	10" CS 10SP Organic	**3620409M91** 887900		
	10" FS 25SP Organic	**3478359M91** 1865836	290	
	10" FS 25SP Steel	**3478569M91**		
Release Bearing	Standard Simpson	**892862M2**	268 Xtra	
	Thick	**3700527M1**		

CLUTCH **...CONTINUED**

Description	Details	Part Number	Model	Picture
Release Bearing	Simpson	**1346P00102**	290 Xtra	
		021010P1	660/680	
Release Bearing Carrier Spring		**1867690M2**	240-165-285	
Shaft	Clutch Release RH Side Short	**180449M1**		
	Clutch Release LH Side Long	**180444M1**		
Spring	Red	**886396M1**		
Washer		**1753751M2**		

COMPONENTS

Description	Details	Part Number	Model	Picture
Air Compressor	PTO	**160819M2**		
Hydraulic Control Valve	Double Acting External	**YCH01-110**		
Hydraulic Control Valve	4 Pipes and 2 Levers	**YCH01-115**		

COOLING

Description	Details	Part Number	Model	Picture
Cap	Radiator	**826772M1**	35 65 165 (203)	
		24850017 885314 885344 24800000	100 Series	
		180224M92	300/400 Series	
	Radiator Red	**1874445M94**	200 Series	

COOLING **...CONTINUED**

Description	Details	Part Number	Model	Picture
Cap	Radiator	**968816M2**	2000/3000 Series	
Drain Plug	Radiator	**1851095**	100 200 300	
Fan Blade	Rear Steel	**1884738M1**	152/203	
	Front Steel	**1884777M1**	152/203	
	Front Steel	**1885172M1**	212/236/248	
	Rear Steel	**1885173M1**	212/236/248	
Fan Assembly		**825363M1**	35X	
	Fixed Blade 6 Blade Steel	**70991937** **1874995M92**	212/236/248 400 Series	
	8 Blade Plastic	**160895M1**	212/236/248	

COOLING **...CONTINUED**

Description	Details	Part Number	Model	Picture
Hose	Bottom Use Any Number (2x)	**826775M1** 828147 898065	65 165 203	
	Bottom	**186968M1**	135 152	
		826988M1	35x 152	
		898748M1	175	
		885563M1	212 236 248 400 Series	
	Bottom Can Use On 135 (2x)	**1860374M2**	240 152	
	Bottom	**3614419M1**	399SE 1006	

COOLING **...CONTINUED**

Description	Details	Part Number	Model	Picture
Hose	Bottom	**1695562M1**	300 Series	
		6201474M1	440X	
		3412053M1	460	
		047914P1	465/475	
Hose	Inlet	**U5MH0047** 3637573M1	236 300 Series	
Hose	Top	**890195M1**	35x 152	
		827930M1	65 203	

COOLING **...CONTINUED**

Description	Details	Part Number	Model	Picture
Hose	Top Can Use On 240	**897455M1**	135 152	
	Top	**898064M1**	165 203	
		894793M1	175	
		899144M1 885564	212 236 248	
		3614420M2	399SE 1006	
		3596204M1	300 Series	
		2800304M1	400 Series	

COOLING **...CONTINUED**

Description	Details	Part Number	Model	Picture
Hose	Top	**6200998M1**	440X	
		3412052M1	460	
		047913P1	465/475	
Hose	Water Pump Bypass	**202016**	152	
	Water Pump Body Outlet to Block Inlet	**34821422**	152	
	Water Pump Body Outlet to Block Inlet	**201562**	203	

COOLING **...CONTINUED**

Description	Details	Part Number	Model	Picture
Radiator	3 Rows	**894319M92**	35X	
	3 Row	**1660499M92**	35/135	
	3 Rows	**897358M4**	100 Series	
	4 Rows	**885580M3**	100 Series	
	3 Row 4 Row	**885579M93** **885411M93**	100 Series 165/188 100 Series 4 Cyl	
	3 Row	**1680547M91**	240	
	4 Row	**1669650M94**	200 Series	

COOLING **...CONTINUED**

Description	Details	Part Number	Model	Picture
Radiator	4 Row	**1695721M2**	300 Series Not 399	
		3614476M91	399 1006	
Shroud	Radiator	**1885721**	135/240	
		898650	100 200	
		1673816	290	
Thermostat		**2485666**	152 354	
		2485668	203	

COOLING **...CONTINUED**

Description	Details	Part Number	Model	Picture
Thermostat		**2485659**	212 236 248	
		2485613 1447384 **70998003**	400 Series	
		2485613	1000 Series	
Water Pump		**41312784** U5MW0097 U5MW0023 3641823	152 35x/135	
		U5MW0061 **U5MW0089** U5MW0055 3641250 41312574	203	
	Blanked Plug	**41313232** 41312551 **U5MW0104** 3641832 3637411	212/236/248	
	Bypass	**U5MW0106** U5MW0188 4224460 4222071	236	

COOLING **...CONTINUED**

Description	Details	Part Number	Model	Picture
Water Pump	Bypass	**U5MW0108** 4222002	236T	
		4131A013 41313225 **41313232** 3637411	400 Series	
		4113E3033 U5MW0192	354 Combine	
		41313045 U5MW0111 3641861	354	
	Elephant Trunk 2x Thermostats	**U5MW0133** 3641880	354	
		U5MW0150		
	Gear Type	**U5MW0156** 4222459 **4222028M91**	1006 T	

COOLING **...CONTINUED**

Description	Details	Part Number	Model	Picture
Water Pump	Gear Type	**U5MW0160** 4222466	1004 / 1006T	
		U5MW0194 **U5MW0206** **U5MW0208** 4225069	1004C	
		U5MW0195		
		U5MW0196 4224708	1106C	

ELECTRICAL

Description	Details	Part Number	Model	Picture
Alternator		**6306843M91**	415/425	
		6229400M91	5300 Series	

ELECTRICAL **...CONTINUED**

Description	Details	Part Number	Model	Picture
Alternator		**3589435M91**	440	
		66021155	Universal	
Battery Terminal	NEG	**LBP1000**		
	POS	**LBP1001**		
Starter		**6306849M91**	5300 Series	
	12V 10T	**SM17040B** **3821818M91** 2834390M91 **JST3067**	275E 290E 375E 390E 475 650 660 680 4235/40/45/55/60/65/70	
	Reduction Gear 10T 1004 New 1000 12V Clockwise	**SM131160I** **2873K632** **2873K404**/532 2873K621/622 3127539 3551773M91 3784889M2 3784890M1 **3823621M91** **JST3907**	475 8280	

ELECTRICAL **...CONTINUED**

Description	Details	Part Number	Model	Picture
Starter		**SM131200I** **4289959M3**	5400	
	3 Cylinder 12V M45 Lucas	**MF22-300** 1680065M1 **3542184M91** **JST1301**		
	4 Cylinder 12V 10T M127 Lucas	**MF22-302** 1860093M2 3546391 **JST1102**		
	4 Cylinder 12V 10T Bosch	**1482841M92**	435 440 460 5340 5355 5360	
	6 Cylinder 12V 10T M127 Lucas	**MF22-303** 1618050M4 **JST1115**		
	12V 10T M127 Lucas	358157M1 **JST1104**		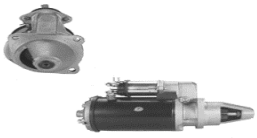
	12V 10T M127 Lucas	3581576M2 3648190M91 **JST1110**	3645/55/90 6180/90 6290 8120/30/60 8220/40/50	
	12V 10T M45 Lucas	1691806R1 894732M1 **JST1306**	300 Series 699 New 200 Series	

ENGINE

Description	Details	Part Number	Model	Picture
Sump		**4222317M1**	4255/4260	
Tube	Dipstick	**3641805M1**	236/248	

FRONT AXLE - 2WD

35X / 135 - BENT AXLE

Description	Details	Part Number	Model	Picture
Beam Arm	LH	**180326M91**	35X	
	RH	**180327M91**	35X	
Beam Nut	Front Support Bent Axle	**353453X1**	135	
Centre Beam	Front Support Bent Axle	**183219M91**	135	

FRONT AXLE 2WD - 35X / 135 - BENT AXLE **...CONTINUED**

Description	Details	Part Number	Model	Picture
Centre Pin	Front Support Swivel Pin Bent Axle	**183221M1**	135	
Centre Pin Bush	Front Support	**180344M1**	65	
		182850M1	135	
Front Support	Bent Axle	**826890M2**	135	
Nut		**353427X1**		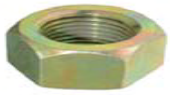
Spindle	RH Length = 280mm OD = 32mm	**897414M91**	35x	
	LH Length = 280mm OD = 32mm	**897415M91**	35x	

FRONT AXLE 2WD - 35X / 135 - BENT AXLE **...CONTINUED**

Description	Details	Part Number	Model	Picture
Spindle	RH Length = 280mm OD = 32mm	**897236M94**	135/240	
	LH Length = 280mm OD = 32mm	**897237M94**	135/240	
Spindle Bush		**180345M1***	35/135/240	
Spindle Kit		**195175M1X2** MF17-351*	65	
Spindle Key		**350355X1**	100/200/300/400	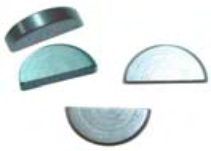
Spindle Seal	Felt	**180355M2***	35/135/240	
Thrust Bearing		**195175M1***	35/135/240	

135 / 240 - STRAIGHT AXLE

Description	Details	Part Number	Model	Picture
Beam Arm	Front Support Straight Axle LH	**888300M92**	135/240	
	Front Support Straight Axle RH	**888304M92**	135/240	
Beam Bolt	Front Support Straight Axle	**1860268M1**	135/240	
Centre Beam	Front Support Straight Axle	**1865911M94**	135/240	
Centre Pin	Front Support Swivel Pin Straight Axle	**1670939M1**	135/240	
	Front Support Swivel Pin Straight Axle	1869633M1 **1869634M1**	135/240	
Centre Pin Bush	Front Support Straight Axle	**1660114M2**	135/240	

FRONT AXLE 2WD - 135 / 240 - STRAIGHT AXLE **...CONTINUED**

Description	Details	Part Number	Model	Picture
Centre Pin Retainer Screw		**1862267M1**	100 / 200	
Centre Pin Shim	0.020 inch	**898018M1**		
	0.030 inch	**898019M1**		
	0.040 inch	**898020M1**		
Front Support	Straight Axle	**1688611M91**	135 240	
Nut		**353427X1**		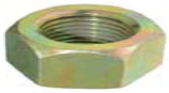
Spindle	RH Length = 295mm OD = 38mm	**897230M94** 1694233M91	168/175/178/185	
	LH Length = 295mm OD = 38mm HD Cast Iron Wheel Hub	**897231M94** 1694234M91	168/175/178/185	

FRONT AXLE 2WD - 135 / 240 - STRAIGHT AXLE **...CONTINUED**

Description	Details	Part Number	Model	Picture
Spindle	RH Length = 280mm OD = 32mm	**897236M94**	135/240	
	LH Length = 280mm OD = 32mm	**897237M94**	135/240	
Spindle Bush		**180345M1***	35/135/240	
		183086M1*	100/200/400 Series	
Spindle Key		**350355X1**	100/200/300/400	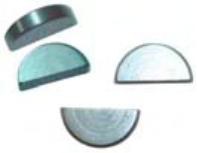
Spindle Kit		**195175M1X2** MF17-350*	135/240	

FRONT AXLE 2WD - 135 / 240 - STRAIGHT AXLE **...CONTINUED**

Description	Details	Part Number	Model	Picture
Spindle Seal	Felt	**180355M2***	35/135/240	
		183021M2*	100/200/400 Series	
		196079M1	100/200 300/400	
Thrust Bearing		**196167M1***	100/200 Series	

100 / 200 / 400 SERIES - STRAIGHT AXLE

Description	Details	Part Number	Model	Picture
Arm	RH	**898342M1**	100/200	
	LH	**898343M1**	100/200	

FRONT AXLE 2WD - 100 / 200 / 400 SERIES - STRAIGHT AXLE **...CONTINUED**

Description	Details	Part Number	Model	Picture
Beam Arm	Front Support 21cm LH RH	**898220M91**	165	
	Front Support 29cm LH RH	**897471M91**	188	
	Front Support 35cm LH RH	**883572M91**	290	
	Front Support RH	**3148818M91**	440	
	Front Support LH	**3148819M91**	440	
Beam Bolt	Front Support Neck	**182501M1**	135	
Beam Nut		**353435X1**	100/200	

FRONT AXLE 2WD - 100 / 200 / 400 SERIES - STRAIGHT AXLE **...CONTINUED**

Description	Details	Part Number	Model	Picture
Beam Bolt	Front Support	**894061M1**	100/200 Series	
Beam Nut	Front Support Double Thread	**894060M3**	100/200 Series	
Centre Beam	Front Support	**897625M93**	100/200 Series	
Centre Pin	Front Support Swivel Pin	**898016M3**	100/200 Series	
		033991P1	400 Series	
Centre Pin Bush	Front Support	**897712M2**	100/200 Series	
Centre Pin Shim	Std	**898017M1**		
	0.020 inch	**898018M1**		
	0.030 inch	**898019M1**		
	0.040 inch	**898020M1**		

FRONT AXLE 2WD - 100 / 200 / 400 SERIES - STRAIGHT AXLE **...CONTINUED**

Description	Details	Part Number	Model	Picture
Front Support		**1684301M91** 1870287	100 200 Series	
Nut		**353427X1**		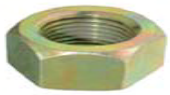
Spindle	RH Length = 257mm OD = 38mm	**898221M96**	165 Standard 265	
	LH Length = 257mm OD = 38mm	**898222M96**	165 Standard 265	
	RH Length = 295mm OD = 38mm	**897230M94** 1694233M91	168/175/178/185	
	LH Length = 295mm OD = 38mm HD Cast Iron Wheel Hub	**897231M94** 1694234M91	168/175/178/185	

FRONT AXLE 2WD - 100 / 200 / 400 SERIES - STRAIGHT AXLE **...CONTINUED**

Description	Details	Part Number	Model	Picture
Spindle	RH Length = 337mm OD = 38mm	**897475M96**	188	
	LH Length = 337mm OD = 38mm	**897476M96**	188	
	RH 403mm 38mm	**883569M93**	165HC 290	
	LH 403mm 38mm	**883570M93**	165HC 290	
	RH	**3697027M91**	300	
	LH	**3697028M91**	300	

FRONT AXLE 2WD - 100 / 200 / 400 SERIES - STRAIGHT AXLE **...CONTINUED**

Description	Details	Part Number	Model	Picture
Spindle	LH	**3146770M91**	440	
	RH	**3146771M91**	440	
Spindle Bush		**196060M1**	65	
		183086M1*	100/200/400 Series	
		882327M1	300 Series	
Spindle Dust Cover		**898350M1**	100/200/300/ 4200/5300	
Spindle Key		**350355X1**	100/200/300/400	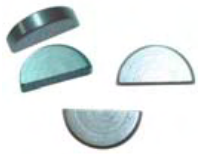

FRONT AXLE 2WD - 100 / 200 / 400 SERIES - STRAIGHT AXLE **...CONTINUED**

Description	Details	Part Number	Model	Picture
Spindle Kit		**195175M1X2** MF17-351*	65	
		196167M1X2 MF17-352*	100/200 Series	
Spindle Seal	Felt	**180355M2***	35/135/240	
		183021M2*	100/200/400 Series	
		196079M1	100/200 300/400	
Spindle Thust Washer		**1696721M1**	300 Series	
		1696722M1	300/4200 Series	

FRONT AXLE 2WD - 100 / 200 / 400 SERIES - STRAIGHT AXLE **...CONTINUED**

Description	Details	Part Number	Model	Picture
Steering Shaft Bush		**897235M1**	100/200/300/400 Series	
Thrust Bearing		**195175M1***	65	
		196167M1*	100/200 Series	
Thrust Washer	Upper	**049731P1**	400 Series	
	Lower	**049730P1**	400 Series	

FRONT WHEEL HUB - 35X

Description	Details	Part Number	Model	Picture
Spindle Nut	19mm	**880284M1** 353928X1	35/135/240	
Spindle Washer		**180010M1**	135/240	
Wheel Bearing Kit		**1810391M91**	35/65	
Wheel Hub		**898085M91**	35	
Wheel Hub Cap		**191142M1**	35/65	
Wheel Nut		**195490M1**	35/65 100/200/300 Series	
Wheel Stud		**181328M1**	35/65/135	

FRONT WHEEL HUB - 135 / 240

Description	Details	Part Number	Model	Picture
Spindle Hub Seal		**897242M1**	135/240	
Spindle Nut	19mm	**880284M1** 353928X1	35/135/240	
Spindle Washer		**180010M1**	135/240	
Wheel Bearing Kit		**1810416M91**	135/240	
Wheel Hub		**886336M1**	135/240	
Wheel Hub Cap		**191142M1**	35/65	
Wheel Stud	1/2" UNF x 25mm	**887135M1**	135/240/265	

FRONT WHEEL HUB - 100/200/300/4200/5300/5400/6400 SERIES

Description	Details	Part Number	Model	Picture
Spindle Nut	32mm	**882263M1**	100/200/400 Series	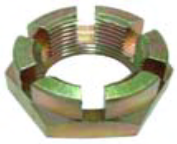
Spindle Washer		**881384M1**	100/200/400 Series	
Wheel Bearing Kit		**1810320M91**	100/200 Series	
Wheel Hub		**898346M93**	100/200 Series	
Wheel Hub Cap		**882637M1**	100/200 Series	
Wheel Nut		**195490M1**	35/65 100/200/300 Series	
Wheel Stud		**831420M1**	100/200/300 Series	

FRONT WHEEL HUB - 400 SERIES

Description	Details	Part Number	Model	Picture
Spindle Hub Seal		**882261M1**	400 Series	
Spindle Nut	32mm	**882263M1**	100/200/400 Series	
Spindle Washer		**881384M1**	100/200/400 Series	
Wheel Hub		**882254M1**	400 Series	
Wheel Hub Cap		**489172M92**	400 Series	
Wheel Nut		**881162M1**	400 Series	

OTHER

Description	Details	Part Number	Model	Picture
Front Support	4x4	**3759003M1**	399 AG	
		6200993M3	440	
	4WD	**067590P2**	440	
Spindle	LH Length = 305mm	**3808113M91**	4200/5400/6400	
	RH Length = 305mm	**3808112M91**	4200/5400/6400	
	LH	**3809154M91**	4200 5300 Series	
	RH	**3809153M91**	4200 5300 Series	

FRONT AXLE 2WD - OTHER **...CONTINUED**

Description	Details	Part Number	Model	Picture
Spindle Thust Washer		**1694722M1**	300 Series	
Wheel Hub Cap		**191495M1**	65	

FUEL SYSTEM

Description	Details	Part Number	Model	Picture
Centre Cable	280mm	**1696819M94**	300 Series	
Foot Cable	1170mm	**3759026M91**	300 Series	
	1415mm	**3614583M91**	399	
Injection Cable	610mm	**1696816M95**	399 (354)	

FUEL SYSTEM **...CONTINUED**

Description	Details	Part Number	Model	Picture
Injector Pump Cable	235mm	**3761359M91**	300 Series	
Stop Cable	1300mm	**3597066M92** 3701714M93	300/4200 Series	
	Overall Length 1350mm Outer Cable 1300mm	**3597065M92**	300/4200 Series	
Throttle Cable	1190mm	**1696815M94**	362-255EP	
	1127mm	**1696817M93**	340-355-362	
	Foot Throttle	**3759024M91**	365 375 390 398	
		3759025M91	399	

FUEL SYSTEM **...CONTINUED**

Description	Details	Part Number	Model	Picture
Throttle Cable	Hand Throttle	**3759021M91**	365 375 390 398	
		3759023M91	399	
Throttle Cable Housing		**1696854M2**	300 Series	
Slider		**1695458M1**	399	
Damper	Fuel Tank	**883622M1** **883623M1** **658081M2**	100/200 Series	
Fuel Cap		**053243R1**	5300 Series	
		1676534M91		

FUEL SYSTEM **...CONTINUED**

Description	Details	Part Number	Model	Picture
Fuel Cap	Fuel Tank	**1698042M91**	100 Series	
		1876534M91	200 Series	
		1695732M1	300 Series	
		3149550M92	400 Series	
	With Lock	**7012429**		
		3782340M1	4200 Series	

FUEL SYSTEM **...CONTINUED**

Description	Details	Part Number	Model	Picture
Fuel Filter Head	Single	**1630925M1**		
	Double Assembly	**1446891M91**		
	Single Assembly	**883786M91**		
	Single Assembly Aluminium	**886373M91**	All	
	Glass Round	**7111-429** 26560111		
	Glass Square	7111-403 **26560075**		

FUEL SYSTEM **...CONTINUED**

Description	Details	Part Number	Model	Picture
Fuel Pump	2 Hole + Glass	**2641408** ULPK0018	152	
	2 Hole	**2641A063** ULPK0006	152	
	4 Hole	**2641808** ULPK0004	152	
	2 Hole + Glass	**2641A065** ULPK0009	203	
	2 Hole	**2641338** ULPK0011	212/236/248	
	4 Hole	**2641728** ULKP0001	212/236/248	
	2 Hole	**2641A064** ULPK0007	354	

FUEL SYSTEM **...CONTINUED**

Description	Details	Part Number	Model	Picture
Fuel Pump	4 Hole	**2641729** ULPK0002	354	
		ULPK0034	1004	
	Electric	**4132A018** **ULPK0038** **ULPK0041** 4227427M91	1104	
	Short	**ULPK0039** 4227428M91	1104	
Fuel Sender Unit		**897403M91**	135	
		897389M91	100 Series	
		1661794M92	240	

FUEL SYSTEM **...CONTINUED**

Description	Details	Part Number	Model	Picture
Fuel Sender Unit		**1678517M2**	200 Series	
		3762527M91	300 Series (>C32103)	
		3762526M91	300 Series (C32104>)	
		3587525M91	400 Series	
Fuel Tank		**897401M92**	135	
		888705M91	100 Series	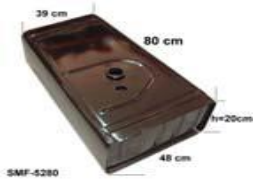
		1672762M91	240	

FUEL SYSTEM **...CONTINUED**

Description	Details	Part Number	Model	Picture
Fuel Tank		**1876528M94**	200 Series	
		3811954M1		
Fuel Tank Reservoir		**891969M91**	152	
Fuel Tap		**1851653M91**	35/65/165 203 (Engine)	
		898540M91	135/240	
		898580M91	212/236/248	
		1694985M92	300 Series	

FUEL SYSTEM **...CONTINUED**

Description	Details	Part Number	Model	Picture
Fuel Tap Screen		**1851654M1**	135-165-285	
Gear	Injector Pump	**31164632**	152	
Heater Plug	Spade Type	**2666108**	All	
	Screw Type	**2666103**	All	
Injection Washer		**0921176**	All	
Injector Body		**MF05-603**	236/248	
Injector Nozzles		**110S6267**	35x	
		150S6743	152/203	
	3 Ring	**150S6561**	212	
	4 Ring	**150S6555**	212	

FUEL SYSTEM **...CONTINUED**

Description	Details	Part Number	Model	Picture
Injector Nozzles	Standard	**150S6705**	236	
	Turbo	**6801019**	236	
		2646826	248	
		150S6507	178	
		150S6556	188	
		150S6600	290	
	Standard	**150S6472**	6-354	
	6-354.4	**150S6730CF**	6-354	
	Turbo	**150S6737CF**	6-354	
	Standard	**77496**	P4000	
	Turbo	**77405**	P4000T	
Injector Pipes	Kit	**35242004-6**	152	
		35343025-28	212 236 248	
		35346181-K	354	
		4222077M91-K	1006	

FUEL SYSTEM **...CONTINUED**

Description	Details	Part Number	Model	Picture
Injector Pipes	No 1	**70993223**	P4000	
	No 2	**70993222**	P4000	
	No 3	**70993221**	P4000	
	No 4	**70993220**	P4000	
Injector Pump		**3230F350**	152	
		3241F102	236/248	
		77513 **77547**	P4000	
		77515	P4000T	
		2643D803 UFK3D824 3369F106G 2643D804	1006	
		4224248M91	1006 Green	

FUEL SYSTEM **...CONTINUED**

Description	Details	Part Number	Model	Picture
Injector Pump		**4224651M91**	1006 Blue	
Leak Off Pipe		**35587326**	152	
		35587344	236	
Stop Knob		**906098M1**	100/200	
Stop Rod		**1671380M93**	200 Series	

152 (3 Cyl) - 135/240

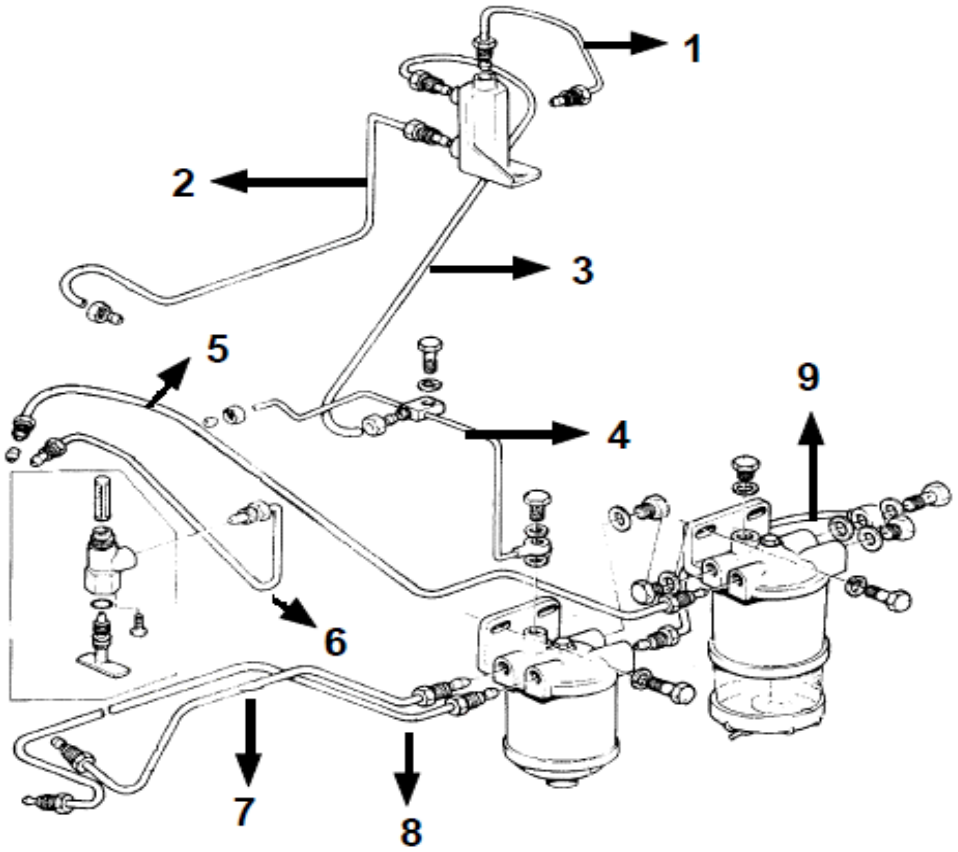

Description	Details	Part Number	Model	Refer to Number
Pipe Fuel Filter		**888486M91**		1
Pipe Fuel Filter		**884472M93**		2
Pipe Fuel Filter		**884473M92**		3
Pipe Fuel Filter		**887046M92**		4
Pipe Fuel Filter		**888488M91**		5
Pipe Fuel Filter		**883712M92**		6
Pipe Fuel Filter		**888482M91**		7
Pipe Fuel Filter		**888490M91**		8
Pipe Fuel Filter		**888484M91**		9

212/236/248 (4 Cyl) - 100 SERIES

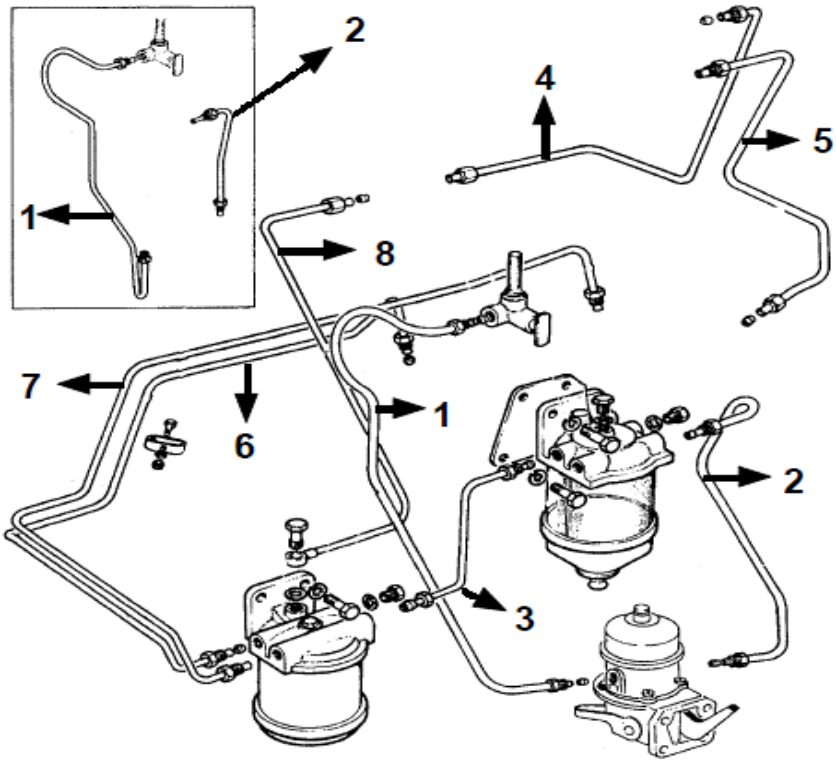

Description	Details	Part Number	Model	Refer to Number
Pipe Fuel Filter	Old Type	1860390M91		1
Pipe Fuel Filter	New Type	1868870M91		1
Pipe Fuel Filter	Old Type	888487M91		2
Pipe Fuel Filter	New Type	1869838M92		2
Pipe Fuel Filter		**1866136M91**		3
Pipe Fuel Filter		888757M91		4
Pipe Fuel Filter		1868783M91		5
Pipe Fuel Filter		**888492M91**		6
Pipe Fuel Filter		**888479M91**		7
Pipe Fuel Filter		**887029M92**		8

236 (4 Cyl) - 200 SERIES

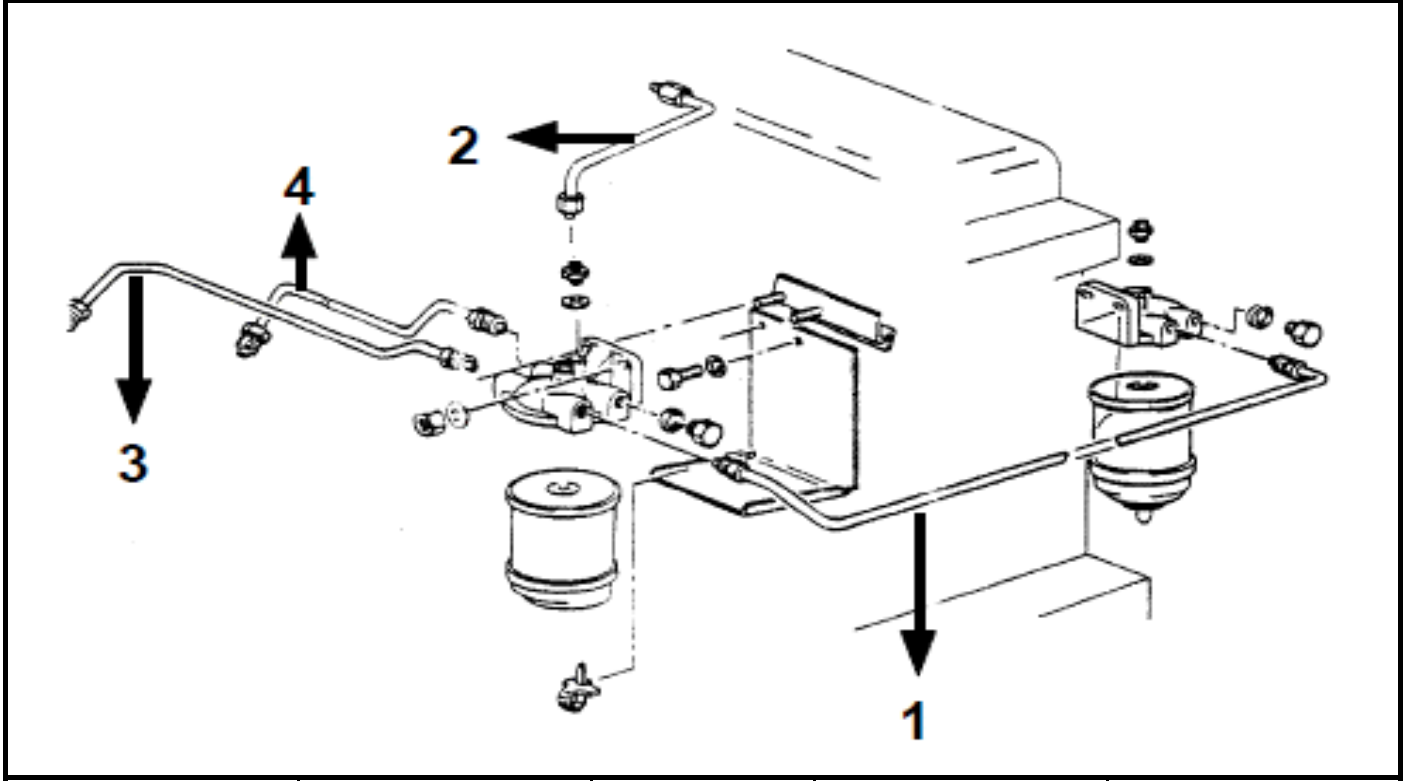

Description	Details	Part Number	Model	Refer to Number
Pipe Fuel Filter		**1676496M91**		1
Pipe Fuel Filter		**1676499M91**		2
Pipe Fuel Filter		**1676498M91**		3
Pipe Fuel Filter		**1676497M91**		4

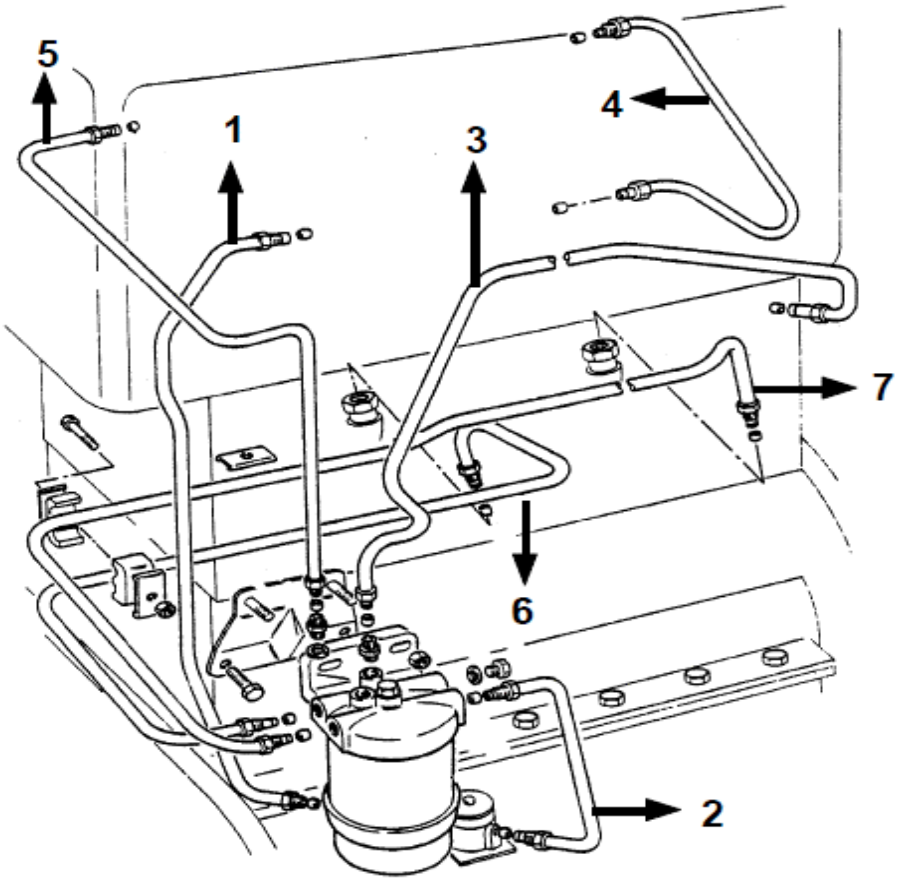

Description	Details	Part Number	Model	Refer to Number
Pipe Fuel Filter		**1667052M92**		1
Pipe Fuel Filter		**1873172M94**		2
Pipe Fuel Filter		**1876549M92**		3
Pipe Fuel Filter		**1679407M91**		4
Pipe Fuel Filter		**1876543M91**		5
Pipe Fuel Filter		**1876539M93**		6
Pipe Fuel Filter		**1876541M94**		7

OTHER

Description	Details	Part Number	Model	Refer to Number
Pipe Oil Pressure	Long	**899453M92**	35X / 135	
Pipe Fuel Filter		**892130M93**	65/165	
Pipe Fuel Guage		**899717M1**	100/200	

GEARBOX

6 SPD - CARRIER - 35X/65/135

Description	Details	Part Number	Model	Picture
Carrier		**827719M91**		
Ring Gear	Round	**180405M1**		
Washer	2x	**180414M1**		

6 SPD - CARRIER - 175/178/185/188

Description	Details	Part Number	Model	Picture
Carrier		**1886634M91** 887128 1808974	178 188	
Coupler	Hi Low Triangle Teeth	**184770M2**		
Plate		**180408M2**		
		184011M1		
		184012M3		
Ring Gear	Round	**1865530M1**	178 188	
Washer	2x	**518414M1**	6 Spd 135 165 175	

8 SPD LD - CARRIER - 100/200 SERIES

Description	Details	Part Number	Model	Picture
Carrier		**897711M92**		
Coupler	Hi Low Triangle Teeth	**184770M2**		
Plate		**180408M2**		
		184011M1		
		184012M3		
Ring Gear	Round 54T	**1671558M1**		
Washer	2x	**897367M1**		

8/12 SPD HD - CARRIER

Description	Details	Part Number	Model	Picture
Carrier	Square Ring Gear HD	**1870538M91**		
Coupler	Hi Low Square Teeth	**1866557M1**		
Plate		**1867423M1**		
		1867425M1		
		1867426M1		
Ring Gear	Heavy Duty Square 68T	**1867424M92**		
Washer	Square Ring Gear HD 2x	**1866545M2**		

8 SPD - 100 SERIES - LEVERS & RAILS

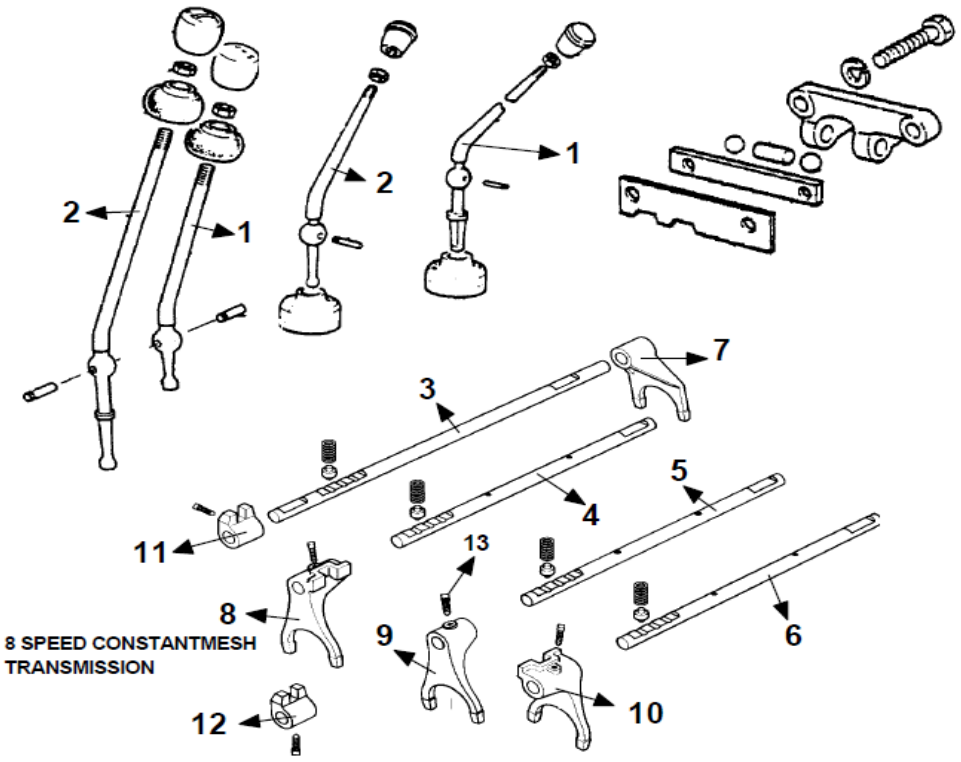

Description	Details	Part Number	Model	Refer to Number
Lever	Hi Low	**180440M1**		**1**
	Hi Low	**894797M1**		**1**
	Speed Round Bottom	**891405M1**		**2**

GEARBOX - 8 SPD - 100 SERIES - LEVERS & RAILS **...CONTINUED**

Description	Details	Part Number	Model	Picture
Lever	Hi Low	**894796M1**		**2**
Rail	Hi Low	**894703M1**		**3**
	1st Reverse	**1678867M1**		**4**
	2nd 4th	**1678865M1**		**5**
	3rd	**1678866M1**		**6**
Fork	Hi Low	**897065M2**		**7**
	1st Reverse	**1860773M1**		**8**

GEARBOX - 8 SPD - 100 SERIES - LEVERS & RAILS **...CONTINUED**

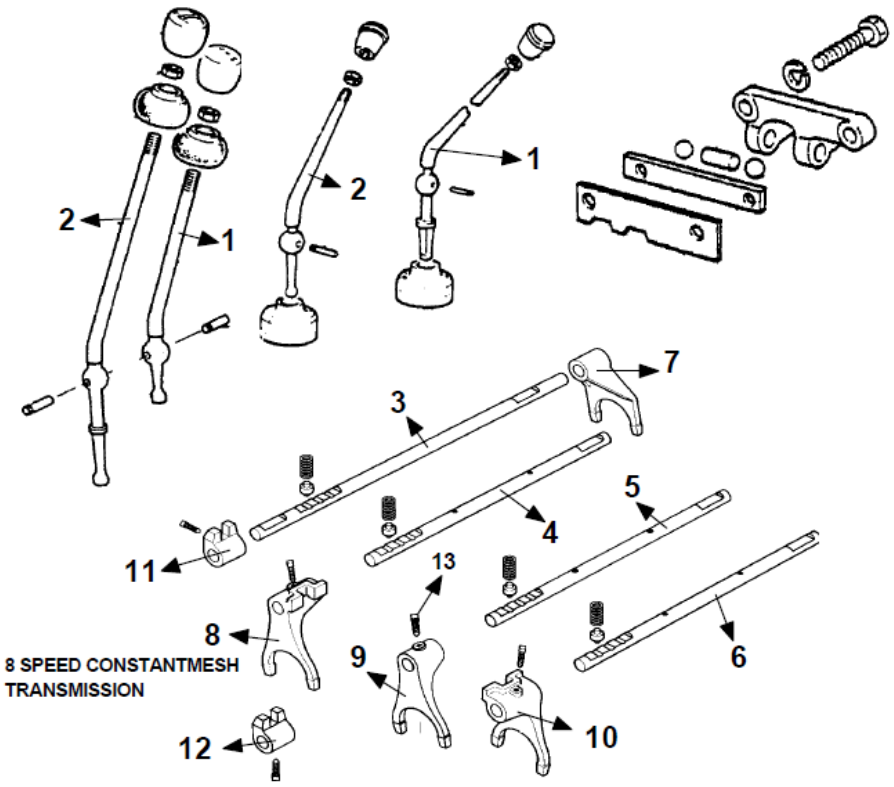

Description	Details	Part Number	Model	Refer to Number
Fork	3rd	**1873532M3**		**9**
	2nd 4th	**1674652M4**		**10**
Selector		**180446M1**		**11**

GEARBOX - 8 SPD - 100 SERIES - LEVERS & RAILS **...CONTINUED**

Description	Details	Part Number	Model	Refer to Number
Selector	3rd	**1862868M1**		**12**
Screw	Fork	**881144M1**		**13**

8 SPD - 200 SERIES - LEVERS & RAILS

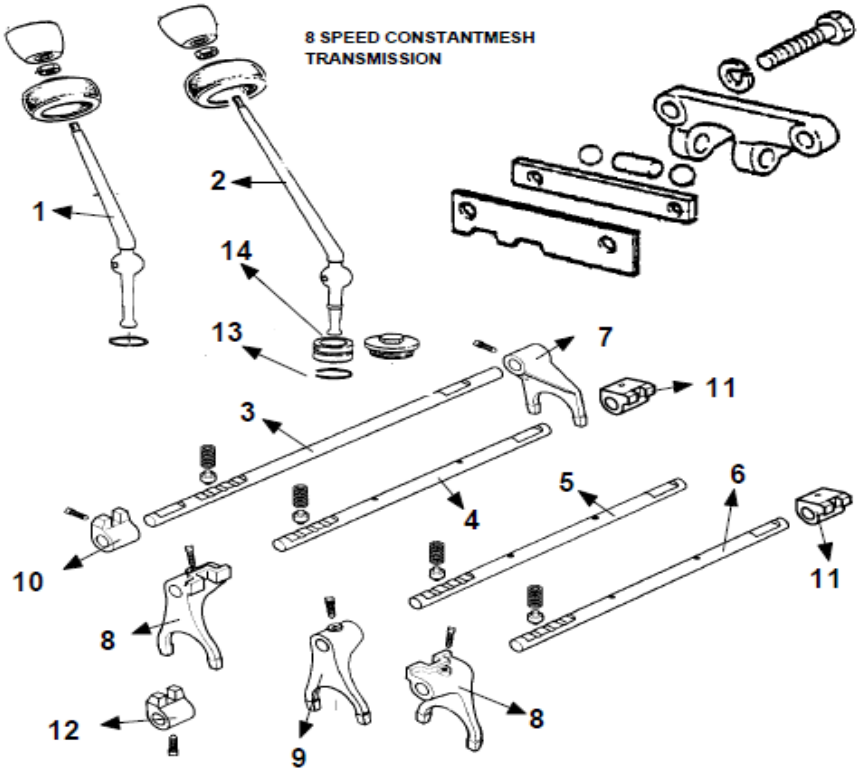

Description	Details	Part Number	Model	Refer to Number
Lever		**1873275M2**		**1**
		1873274M1		**2**
	Main Flattened Bottom	**1673814M91**	240	

GEARBOX - 8 SPD - 200 SERIES - LEVERS & RAILS **...CONTINUED**

Description	Details	Part Number	Model	Refer to Number
Rail	Hi Low	**894703M1**		**3**
	1st Reverse	**1678867M1**		**4**
	2nd 4th	**1678865M1**		**5**
	3rd	**1678866M1**		**6**
Fork	Hi Low	**897065M2**		**7**
	1st Reverse + 2nd 4th	**1860773M1**		**8**
	3rd	**1873532M3**		**9**

GEARBOX - 8 SPD - 200 SERIES - LEVERS & RAILS **...CONTINUED**

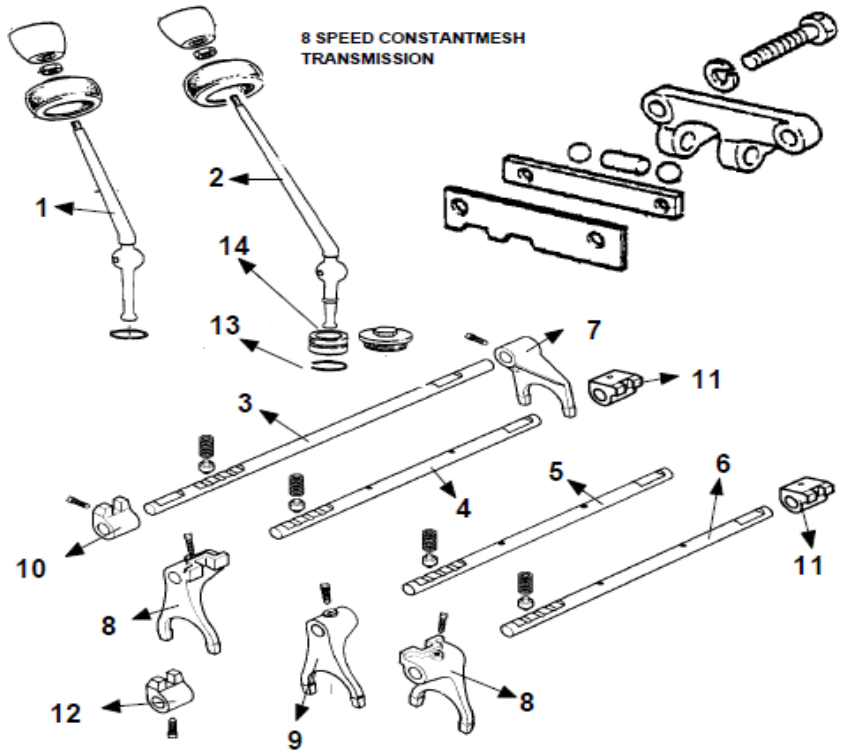

Description	Details	Part Number	Model	Refer to Number
Selector		**180446M1**		**10**
		1877607M1		**11**
	3rd	**1862868M1**		**12**
O-ring		831527M1		**13**
Cup		1663884M1		**14**

12 SPD - LEVERS & RAILS

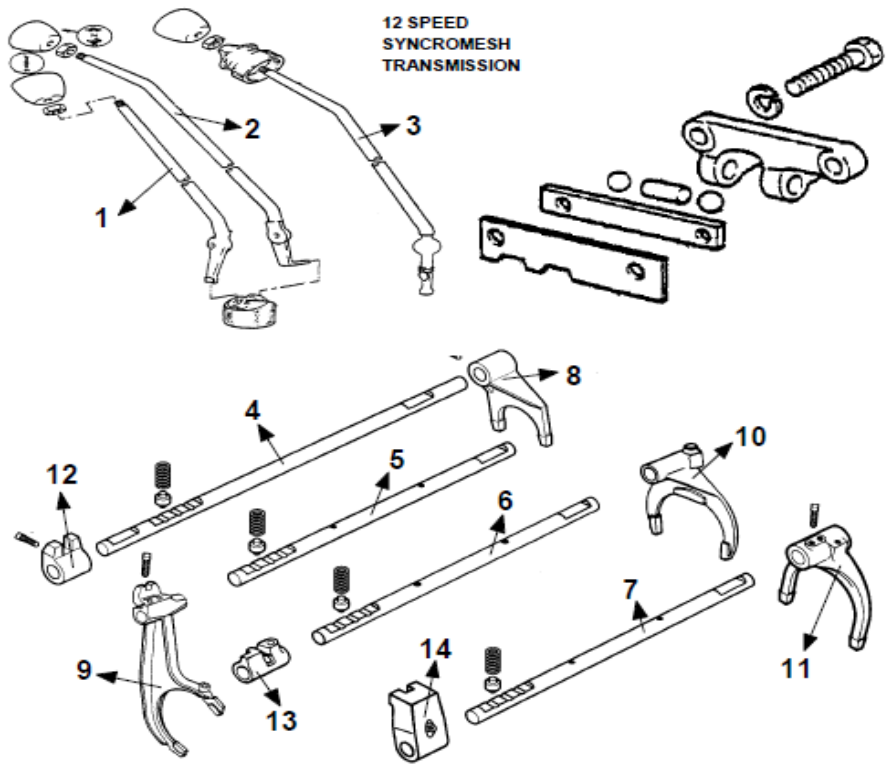

Description	Details	Part Number	Model	Refer to Number
Lever	Hi Low	**1674933M3**		**1**
	Centre	**1674939M3**		**2**
	Speed	**1674927M2**		**3**

GEARBOX - 12 SPD - LEVERS & RAILS **...CONTINUED**

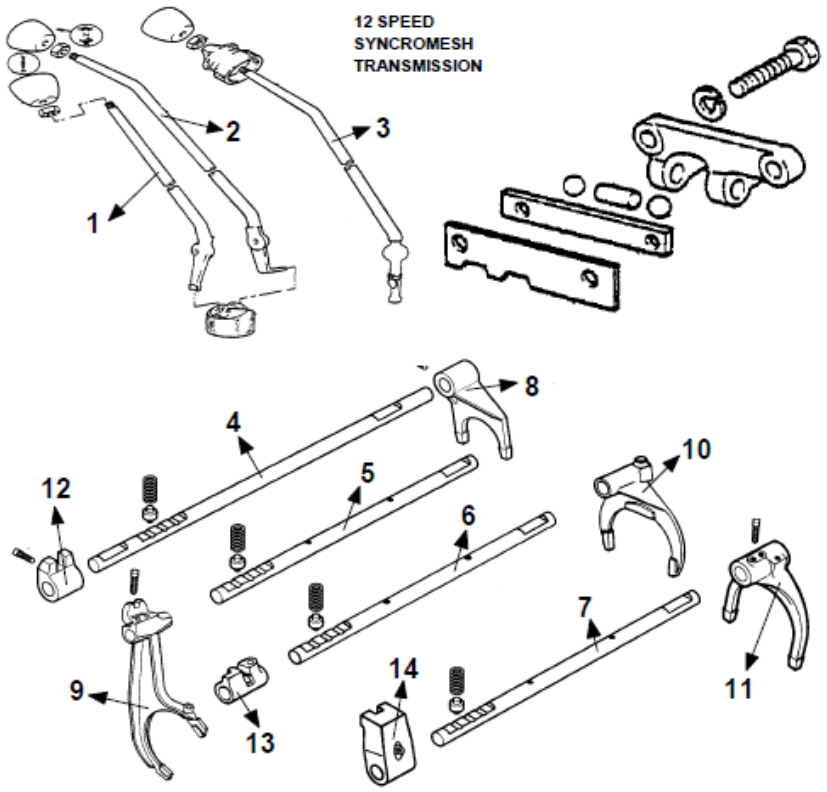

Description	Details	Part Number	Model	Refer to Number
Lever	Speed	**1696205M1**		
Rail	Hi Low	**894703M1**		**4**
		1674531M1		**5**
	1st Reverse	1674528M1		**6**
		1672783M1		**7**

GEARBOX - 12 SPD - LEVERS & RAILS **...CONTINUED**

Description	Details	Part Number	Model	Refer to Number
Fork	Hi Low	**897065M2**		**8**
		1674533M3		**9**
		1674529M3		**10**
		1674654M3		**11**
Selector		**1674536M1**		**12**
		1674530M1		**13**
		1672781M1		**14**

GEARBOX - 12 SPD - LEVERS & RAILS **...CONTINUED**

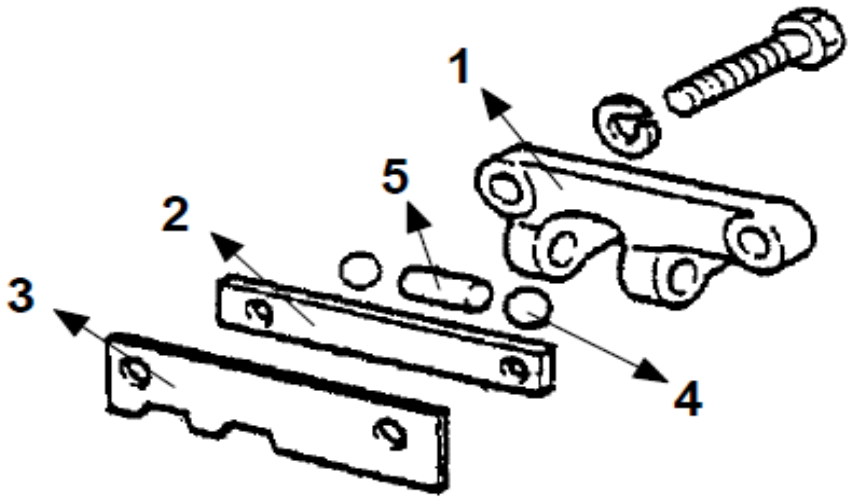

Description	Details	Part Number	Model	Refer to Number
Retainer		**1860761M1**		**1**
Packing		1860765M2		**2**
Plate		**1860764M3**		**3**
Ball		**391838X1**		**4**
Pin		**1860767M1**		**5**

MAIN SHAFT & GEARS

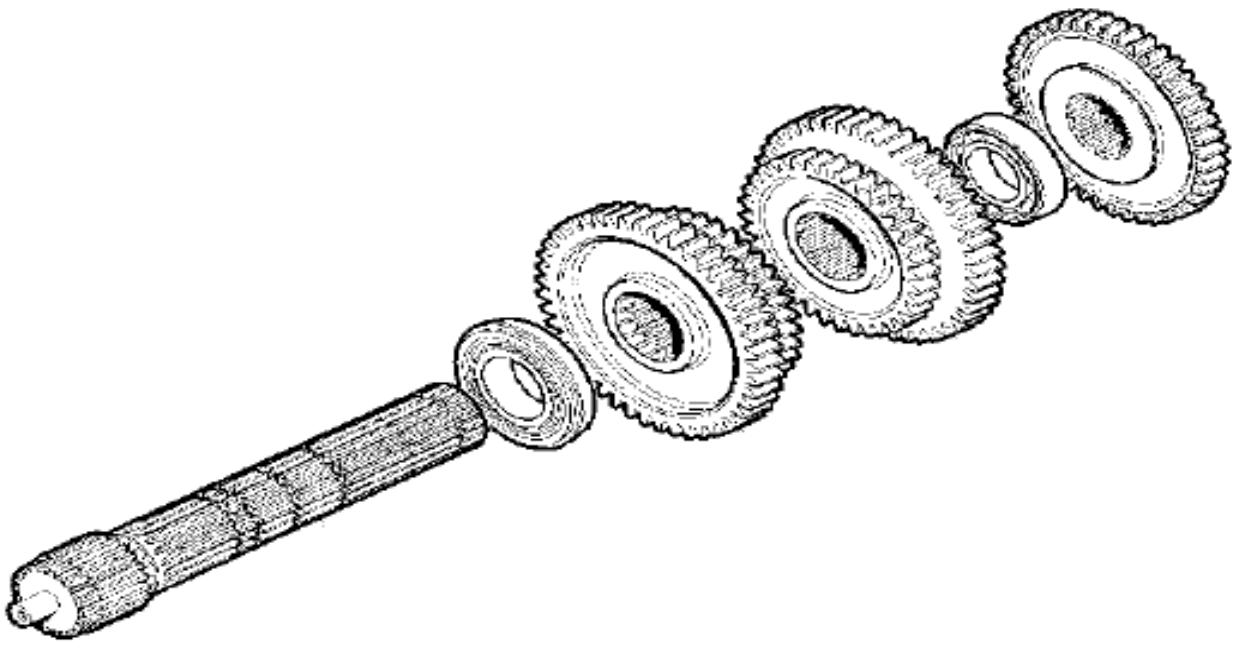

Description	Details	Part Number	Model	Picture
Bearing Kit		**830735M91**	8/12 Spd	
Counter Shaft		**183054M92**	6 Spd	
		906472 **906473M92**	8 Spd	
		1677827M3		

GEARBOX - MAIN SHAFT & GEARS **...CONTINUED**

Description	Details	Part Number	Model	Picture
1st Gear	44T	**520700M2** 1682688M1 1682689	6 Spd	
2nd + 3rd Gear	36T + 46T	**880957M1** **1682691M1**	6 Spd	
2nd + 4th Gear	36T + 46T	**880957M1** **1682691M1**	8 Spd	
3rd Gear	41T	964917 **1682690M1** 1660094	8 Spd	
Gear (Main Drive)	45T	**906469M1**	8 Spd	
	50T	**906468M1**	8 Spd	
Gear (Pinion)	33T	**180415M1**	6/8 Spd	

GEARBOX - MAIN SHAFT & GEARS **...CONTINUED**

Description	Details	Part Number	Model	Picture
Gear (Pinion)	38T	1693580M91	12 Spd	
	36T	1693582M91	12 Spd	
Gear (2nd Pinion)	23T	**180419M1**	6/8 Spd MultiPower	
	20T	**1687430M1**	12 Spd	
Gear (3 Pinion)	28T	**964916M1**	8 Spd	
	33T	**1617923M3**	12 Spd	
Gear (Reverse)	21T + 13T	**183040M1**	6/8 Spd MultiPower	

GEARBOX - MAIN SHAFT & GEARS **...CONTINUED**

Description	Details	Part Number	Model	Picture
Gear (Reverse)	14/21T	**1688127M1**	8/12 Spd	
Gear (Reverse) Shaft		**180445M1**	8/12 Spd	
Main Shaft		**894702M1**	6 Spd	
	18 Spline 7 Groove	**1870149M2**	8 Spd	
		1687643M1	8 Spd LD	
		1687642M1	8 Spd HD	
	18/31T	**1671459M2**	12 Spd	

GEARBOX - MAIN SHAFT & GEARS **...CONTINUED**

Description	Details	Part Number	Model	Picture
Main Shaft	22/31T	**1662224M2**	12 Spd	

PTO & SPICKET SHAFT

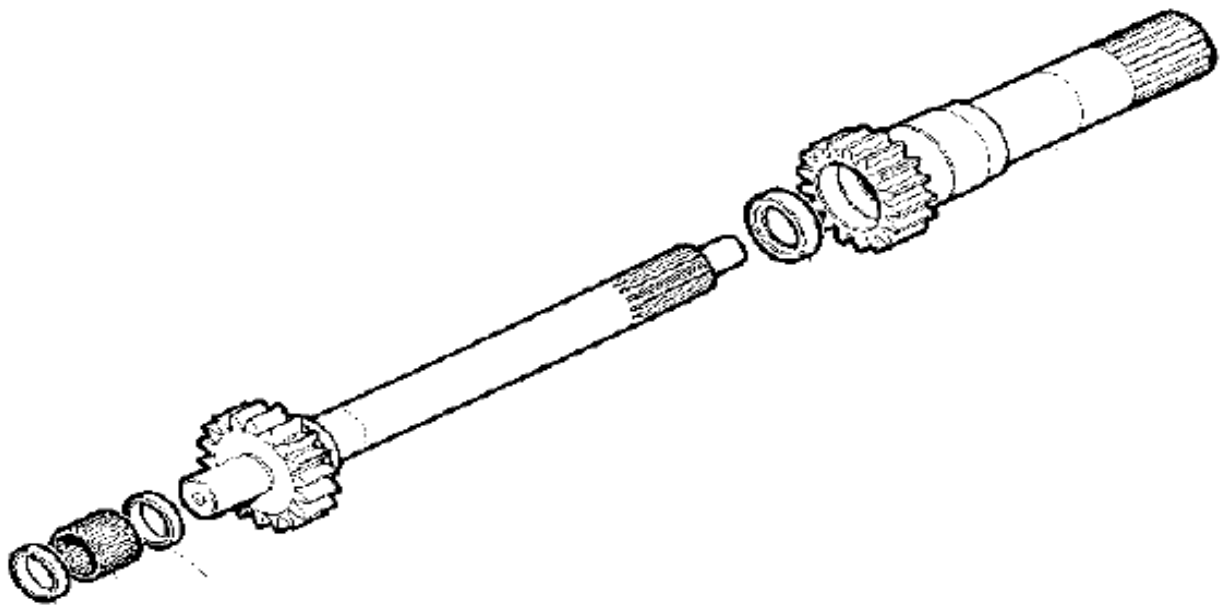

Description	Details	Part Number	Model	Picture
PTO Shaft	16T FS	**1671704M91**		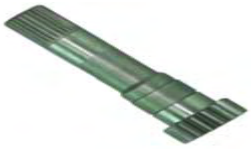
	10/17T CS	**1860009M91**	8 Spd	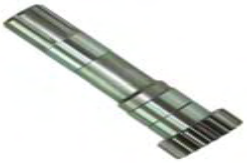

GEARBOX - PTO & SPICKET SHAFT **...CONTINUED**

Description	Details	Part Number	Model	Picture
PTO Shaft	25/16T FS	**1868530M1** **1868531M1**	8 Spd	
	16T	**1671705M1**	12 Spd	
	17T	**1677739M1**	12 Spd	
	20T FS	**1869712M91**		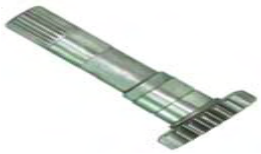
		1677746M92	12 Spd	
PTO Shaft Oil Seal		**195501M1**	6 Spd	
		1860011M1	8 Spd	

GEARBOX - PTO & SPICKET SHAFT **...CONTINUED**

Description	Details	Part Number	Model	Picture
Oil Seal		**883935M4**	8/12 Spd	
Spicket Shaft	18T	**964926M3**	8 Spd	
		3760467M1	8 Spd (440)	
	24T	**964925M3**	8 Spd	
	25T	**908493M1**	8 Spd	
	26T	**1862423M1**	8 Spd	
	10T	1677725M2	12 Spd	

GEARBOX - PTO & SPICKET SHAFT **...CONTINUED**

Description	Details	Part Number	Model	Picture
Spicket Shaft Bearing		**2700273M1**	8/12 Spd	
Spicket Shaft Spacer	2x	**2700274M2**	8 Spd	
	Front	**964929M1**	8 Spd + 400 Series	
	Rear	**964944M1**	8 Spd + 400 Series	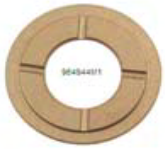

RETAINER

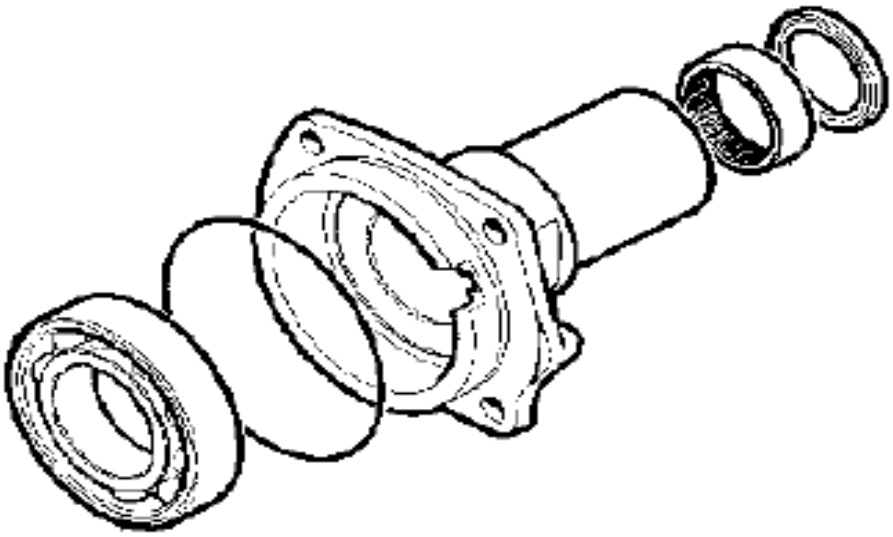

Description	Details	Part Number	Model	Picture
Retainer		**180428M3**	6 Spd	
		1867223M1	6 Spd	
		1860890M92	8/12 Spd	
	12 Spd	**1693833M92**	12 Spd	

GEARBOX - RETAINER **...CONTINUED**

Description	Details	Part Number	Model	Picture
Retainer		**1860889M1**	MultiPower	
Retainer Gasket		**180434M1**	6 Spd	
Retainer Needle Bearing		**886668M1**	8/12 Spd	
Retainer Oil Seal		195523M1	6 Spd	
		195503M1	6 Spd	
		1860867M3	8/12 Spd MultiPower	
Retainer O-ring		**886089M1**	8/12 Spd MultiPower	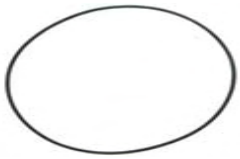

12 SPEED SYNCHROMESH

FRONT

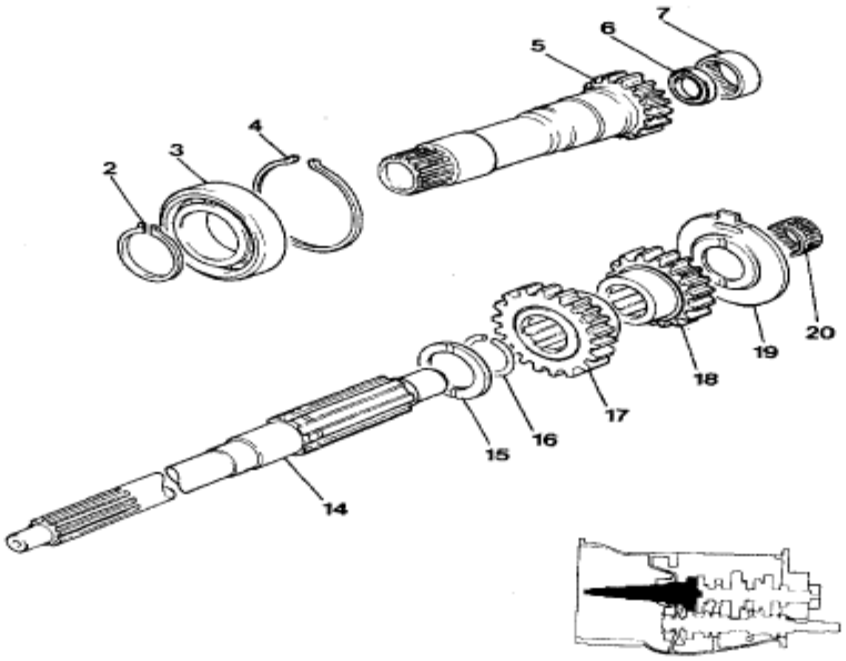

Description	Details	Part Number	Model	Refer to Number
Ring		**762101M1**		2
Bearing	PTO	**GK2151**		3
		834303M1		3
		899377M2		3
Ring		358890 **377631X1**		4
PTO Input Shaft	17T	**1677739M1**		5
	20T	**1677738M1**		5
	20T	**3599579M1**		5
	16T	**1677740M1**		5
Oil Seal		**883935M4**		6
Bearing		**1677724M1**		7

GEARBOX - 12 SPEED SYNCHROMESH - FRONT **...CONTINUED**

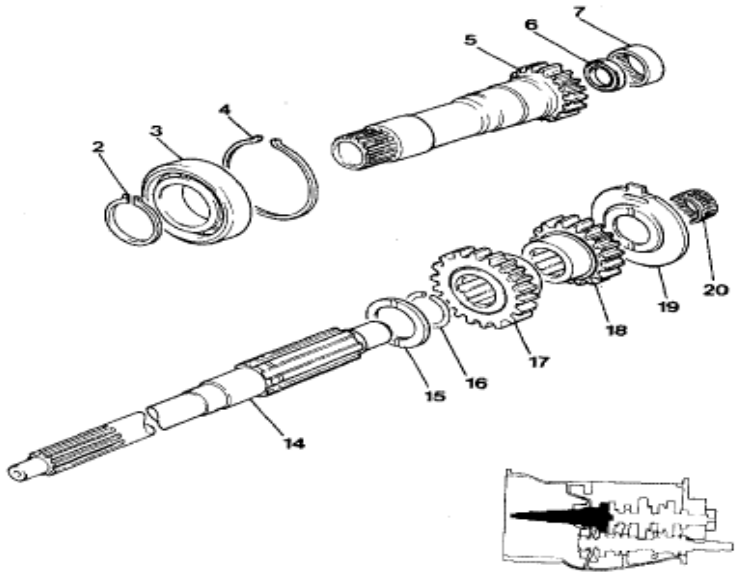

Description	Details	Part Number	Model	Refer to Number
Input Shaft	10T	1677724M1		14
	6T 20T FS	**1692502M1**		14
Washer		**1677742M2**		15
Ring		**358969X1**		16
Input Shaft Gear	24T	1693578M1		17
	29T	**1692497M1**		17
	37T	3596249M1		17
	32T	1693862M1		17
	20T	1693577M1		18
	25T	**1692496M2**		18
	32T	3596250M1		18
	28T	1693861M1		18
Washer		**1674668M1**		19
Bearing		**2700273M1**		20

TOP

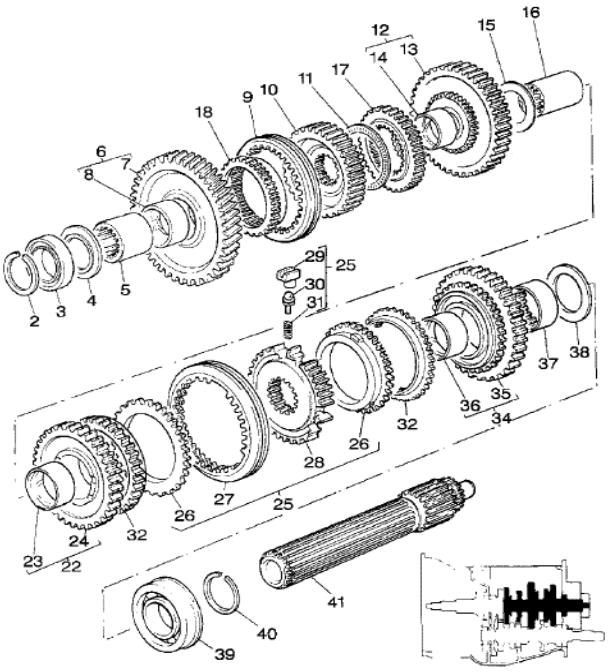

Description	Details	Part Number	Model	Refer to Number
Ring		**762101M1**	ZF	2
Bearing		**338552X1**	ZF	3
Shim	4.14/4.19mm	**1671888M2**	ZF	4
	4.39/4.45mm	1671889M2	ZF	4
	4.62/4.67mm	1671890M2	ZF	4
	4.85/4.90mm	1671891M2	ZF	4
Bush		1617893M1	ZF	5
1st Gear	42T	**1686467M91**	ZF	6
Bush		**1617890M1**	ZF	8
Gear		**1686443M1**	ZF	9
		1664556M2	ZF	10
Bearing		**1663796M1**	ZF	11

GEARBOX - 12 SPEED SYNCHROMESH - TOP **...CONTINUED**

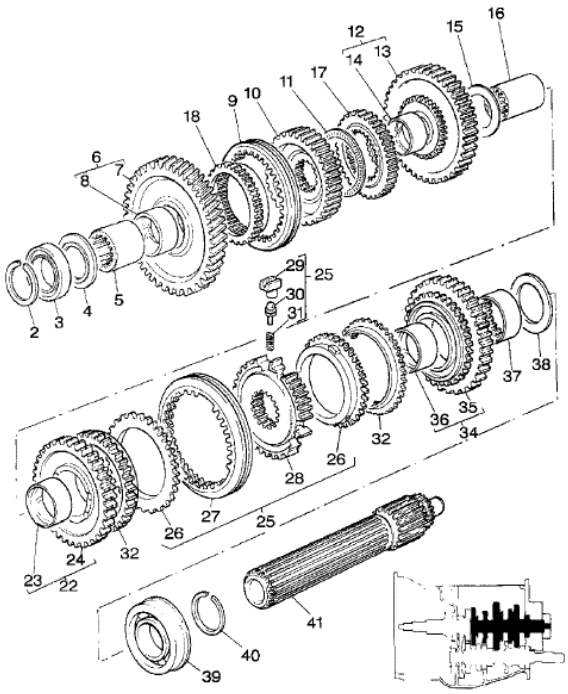

Description	Details	Part Number	Model	Refer to Number
Gear	Reverse 44T	**1686468M91**	ZF	12
Bush		**1867246M1**	ZF	14
Washer		**1617885M2**	ZF	15
Bush		**1617892M1**	ZF	16
Gear		**1686459M1**	ZF	17
		1686458M1	ZF	18
3rd Gear	36T	**1686028M91**	ZF	22
Bush		**1867250M1**	ZF	23
Synchromesh Assy		1677238M91	ZF	25
Gear		**1684022M1**	ZF	26
		1686796M1	ZF	27
	31T	1671773M3	ZF	28
Support		3033894M1	ZF	29

GEARBOX - 12 SPEED SYNCHROMESH - TOP **...CONTINUED**

Description	Details	Part Number	Model	Refer to Number
Ball Pin		**3188958M1**	ZF	30
Spring		3698240M1	ZF	31
Gear		**1685067M1**	ZF	32
2nd Gear	40T	**1687429M91**		34
Bush		**1867246M1**		36
		1617894M1		37
Washer		**1867259M1**		38
Bearing		**3008252X1** **1675274M1**		39
Circlip	(5x)	**195363M1**		40
Main Shaft	18/31T	**1671459M2**		41
	22/31T	**1662224M2**		41

BOTTOM

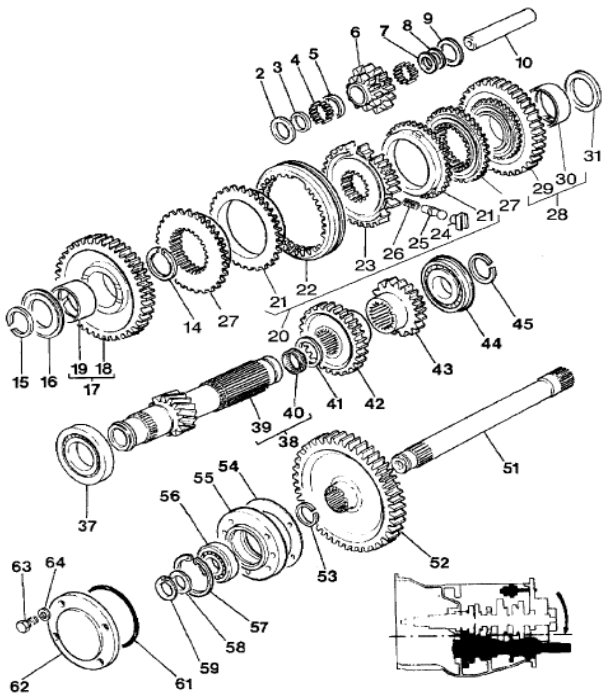

Description	Details	Part Number	Model	Refer to Number
Washer		**1688132M1**		2
		183037M1		3
Needle Roller	56X	**183039M1**		4
Bush		**1688131M1**		5
Reverse Gear	14/21T	**1688127M1**		6
Washer		**1688128M1**		7
		1688129M1		8
		1688130M1		9
Shaft		**180445M1**		10
Ring		**1440873X1**		14
		831581M2		15
Washer		**1677829M1**		16
Gear	36T	1693582M91		17

GEARBOX - 12 SPEED SYNCHROMESH - BOTTOM **...CONTINUED**

Description	Details	Part Number	Model	Refer to Number
Bush		**1677828M2**		19
Synchromesh Assy		3611935M91	ZF	20
Gear		3701884M1	ZF	21
		3701882M2	ZF	22
Toppet		3033894M1	ZF	24
Ball Pin		**3188958M1**	ZF	25
Spring		3698240M1	ZF	26
Gear		3771370M1	ZF	27
	38T	1693580M91		28
Bush		**1682388M1**		30
Washer		1677973M2		31
Bearing		**3003372X1**		37
Counter Shaft		**1677827M3**		39
Needle Bearing		**195453M1**		40
Washer		**195500M1**		41
3rd Gear, Counter	33T	**1617923M3**		42
2nd Gear, Counter	20T	**1687430M1**		43
Bearing		**3008252X1** **1675274M1**		44
Circlip	(5x)	**195363M1**		45
PTO Shaft	21T	**1869279M1**		51
		1868533M1		51
PTO Drive Gear	53T FS	**1868532M1**		52
Circlip		**358913X1**		53

GEARBOX - 12 SPEED SYNCHROMESH - BOTTOM **...CONTINUED**

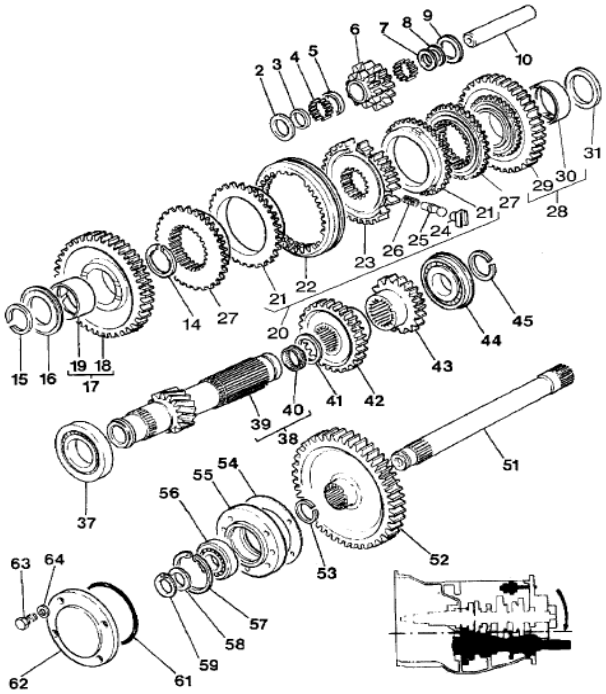

Description	Details	Part Number	Model	Refer to Number
Gasket		**180432M1**		54
Housing		**899331M1**		55
Bearing		**899377M2**		56
Circlip		**355988X1**		57
		881122M2		58
		899385M1		59
O Ring	82.6 x 3.2	**1004633M1**		61
Cover		**883620M1**		62

OTHER

Description	Details	Part Number	Model	Picture
Boot	Round	**180579M3**	6/8 Spd	
	Single	**1694127M3**	200/300 Series	
	Double Big	**1694126M3** 022008P1	200 / 300 / 4200 / 4300 Series	
	Double Small	**1694126M1**	200 / 300 / 4200 / 4300 Series	
		1678565M1	400 Series	
Cover		**1667385M1**	200/300 Series	
Gear	PTO Shaft	**3599580M1**	300-4200 Series	

GEARBOX **...CONTINUED**

Description	Details	Part Number	Model	Picture
Housing	Transmission	**1867505M91**	8/12 Spd	
Knob	Gear Lever LSH + Main Lever	**180006M91**	6 Spd	
	Gear Lever LSH	**1862399M1**	8 Spd	
	Gear Lever	**1862401M1**	135-148-175	
	Gear Lever R1423	**3599997M1**	12 Spd	
Plunger		**180418M2**	8 / 12 Spd	
Ring	Bottom	**195499M1**	8 Spd	

GEARBOX **...CONTINUED**

Description	Details	Part Number	Model	Picture
Shaft		**1866661M91**	100/200 Series	
Sleeve	PTO	**532898M1**	165-285	
Spring		**191221M1**	All	
		192007M1	8 Spd	
Washer	Bottom	**183038M1**	8 Spd 400 Series	

HYDRAULICS

HYDRAULIC PUMP

CONTROL VALVE

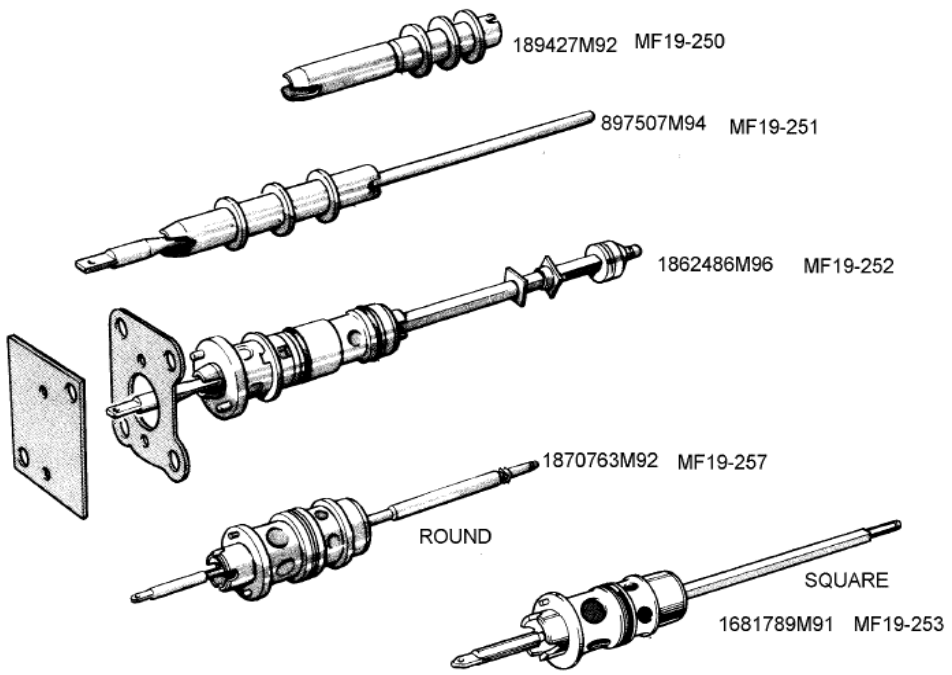

Description	Details	Part Number	Model	Picture
Control Valve		**189427M92**	MKI 35/65	
		897507M94	MKI 135/165/175	
		1862486M96	MKII	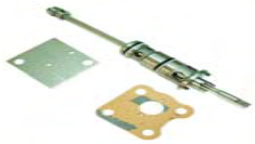

HYDRAULICS - HYDRAULIC PUMP - CONTROL VALVE **...CONTINUED**

Description	Details	Part Number	Model	Picture
Control Valve	Round	**1870763M92**	MKIII	
	Square	**1681789M91**	MKIII	
	Latest	**3611085M91**	MKIII 300/400/4200	

HYDRAULIC PUMP

REPAIR PARTS

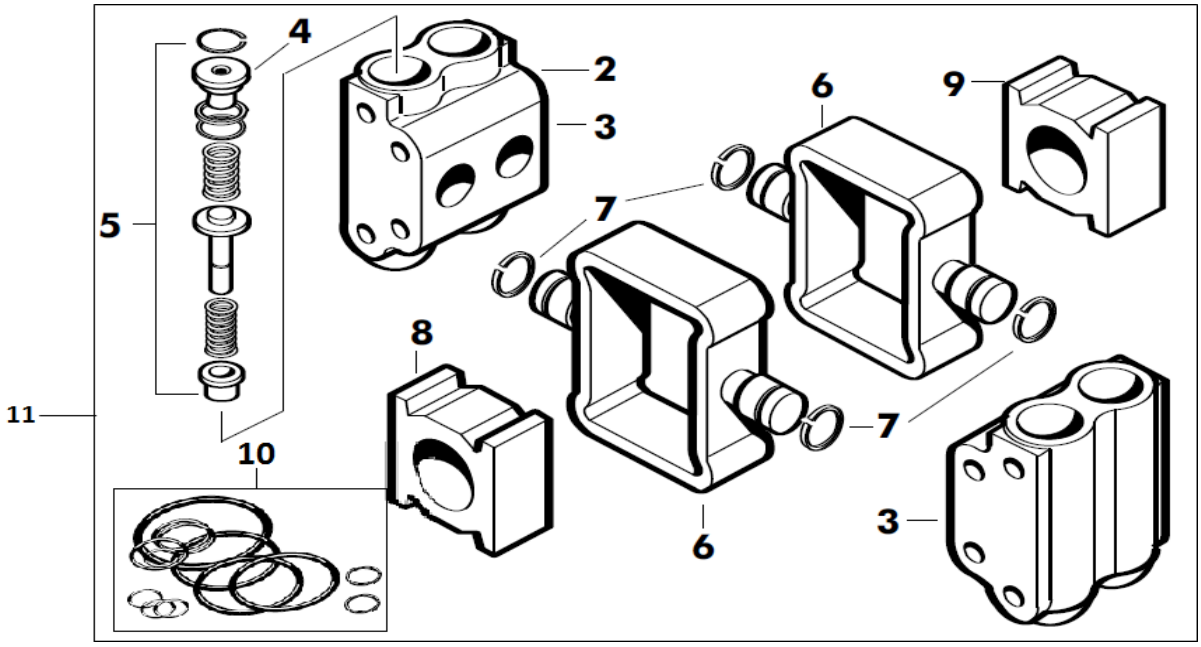

Description	Details	Part Number	Model	Refer to Number
Valve Chamber	With Valves	**184471M1**	MKI	2
		897491M1	MKII	2
		888702M3 1868734 P983	MKII	2
		3699709M91 1868435 P984	MKIII	2
Plug	Chamber Valve	**888700M1**	MKII	4
		1868741M1	MKIII	4
Chamber Repair Kit	Chamber Valve	**1810678M91**	MKII & MKIII	5
Piston		**190799M1**	MKI	6
		1860038M1 897492M1	MKII & III	6
Piston Rings		**892604M1**	MKI	7
		897493M1	MKII III	7

HYDRAULICS - HYDRAULIC PUMP - REPAIR PARTS **...CONTINUED**

Description	Details	Part Number	Model	Picture
Cam Block	Front With Shoulder	**180924M2**	MKI II III	8
	Rear Without Shoulder	**180925M2**	MKI II III	9
O-ring Kit		**1810467M91**	Can Use MKII On MKI MKI	10
		1810684M92	MKII	10
		1810680M91	MKIII	10
Repair Kit	Hydraulic Pump (excl. o-ring kit)	**MF19-160**	MK I 35-65-765	11
	2x Chambers 2x Pistons 2x Blocks (excl. o-ring kit)	**1810858M91** MF19-161	MKI 135-165-175-178	11
	2x Chambers 2x Pistons 2x Blocks (excl. o-ring kit)	**MF19-162** **1810859M91**	MKII	11
	2x Chambers 2x Pistons 2x Blocks (excl. o-ring kit)	**1810860M91**	MKIII	11

HYDRAULICS - HYDRAULIC PUMP - REPAIR PARTS **...CONTINUED**

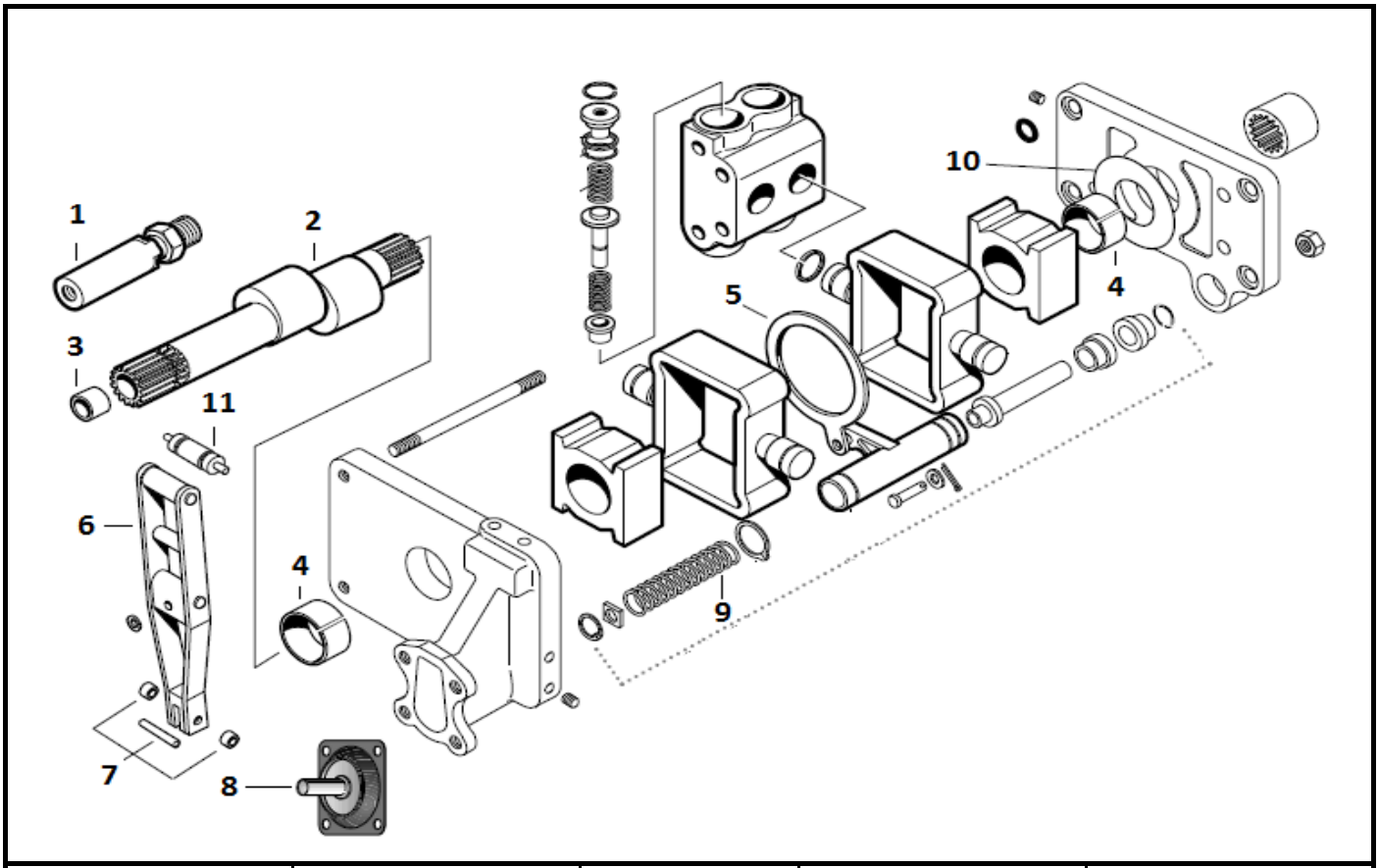

Description	Details	Part Number	Model	Refer to Number
Safety Valve	Red Dot	**828927M92**	MKI	1
	Yellow Dot	**883402M92**	MKII	1
	Black Dot	**884747M92**	MKII	1
Camshaft	10 Spline	**899915M92**	MKI II	2
	21 Spline	**1868544M92**	MKIII	2
	Fine Spline 21 Spline	**1871781M1**		2
	21T	**1871782M3**	440	2
Needle Bearing		**1000251M1**	All	3
Bush	Camshaft	**1865012M1**	MKI & II	4
		1664491M1	MKIII	4

HYDRAULICS - HYDRAULIC PUMP - REPAIR PARTS **...CONTINUED**

Description	Details	Part Number	Model	Refer to Number
Cam Follower		**180933M1**		5
Lever		**897516M91**	MKI & MKII	6
		1868471M91	MKIII	6
	Pin	**897504M1**	All	7
	Roller	**897599M1**	All	7
	Roller & Pin Kit	**897599M1-K**	All	7
Safety Valve Diaphragm		**1860114M91**	MKIII	8
Spring	Control Valve	**180940M1**	100/200/300/400	9
Washer	Hydraulic Pump Housing	**1664589M91**	100/200/300/400	10
Roller	Hydraulic Lever	**898202M1**	MKI & MKII	11
Description	**Details**	**Part Number**	**Model**	**Refer to Number**
Dowel Pin		**180905M1**	MKI 35/65	
		898643M1	MKII & MKIII	
	With Brake Pivot	**898937M1**		

HYDRAULICS - HYDRAULIC PUMP - REPAIR PARTS **...CONTINUED**

Description	Details	Part Number	Model	Refer to Number
Housing	Hydraulic Pump Back	**897487M92**	MK II	
	Hydraulic Pump Front	**897488M91**	MK II	
	Hydraulic Pump Back	**1655499M91**	MK III	
	Hydraulic Pump Front	**1665609M92**	MKIII	
	Pressure Valve	**1868503M93**	200 Series	
Hydraulic Filter	160 x 72mm	**1674984M92** **1810694M91**	MKIII	

HYDRAULICS - HYDRAULIC PUMP - REPAIR PARTS **...CONTINUED**

Description	Details	Part Number	Model	Refer to Number
Hydraulic Pump		**1684582M92**	MKII	
	Standing Safety Valve	**1870995M92** 1683301M92	MKIII	
	Bend Lever Standing Valve	**3773700M92**	MKIII	
	Bend Lever C/Shaft Stand	**3701159M91**	MKIII	
		6215817M91	680	
Relief Valve	Hi Flow	**3401834M91**	300/400/ 4200/5300 Series	
Safety Valve	Stand Up	**1680061M91**	MKIII	

HYDRAULICS - HYDRAULIC PUMP - REPAIR PARTS **...CONTINUED**

Description	Details	Part Number	Model	Refer to Number
Strainer		**884906M92** 185551	MKI II	
	89 x 62mm Short	**1870199M92**	MKIII	

IPTO				
Description	**Details**	**Part Number**	**Model**	**Picture**
Clutch Assembly		**4200050M91**	200 Series	
		3612562M94	200/300 Series	
Friction Disc	Steel	**1870860M1**	200/300/4200 7X	
	Bronze	**1688532M1**	200/300/4200 7X	

HYDRAULICS - IPTO **...CONTINUED**

Description	Details	Part Number	Model	Refer to Number
Piston Ring	IPTO	**1866260M1**	100/200/300 Series	
Pump	IPTO Single Inlet	**1686765M91**		
	IPTO 2 Inlet 12 Spline	**1686766M91**		
	IPTO	**886821M94**		LANDBOUPART
Ring	IPTO Drum	**3610279M2**	200/300/400	LANDBOUPART
	IPTO Drum	**3612141M1**	200/300/400	
Seal	IPTO Drum	**1870859M1**	200/300/400/4200	
Washer	IPTO Drum	**3699433M1**	200/300/400	LANDBOUPART

LIFT COVER & CYLINDER

DRAFT CONTROL

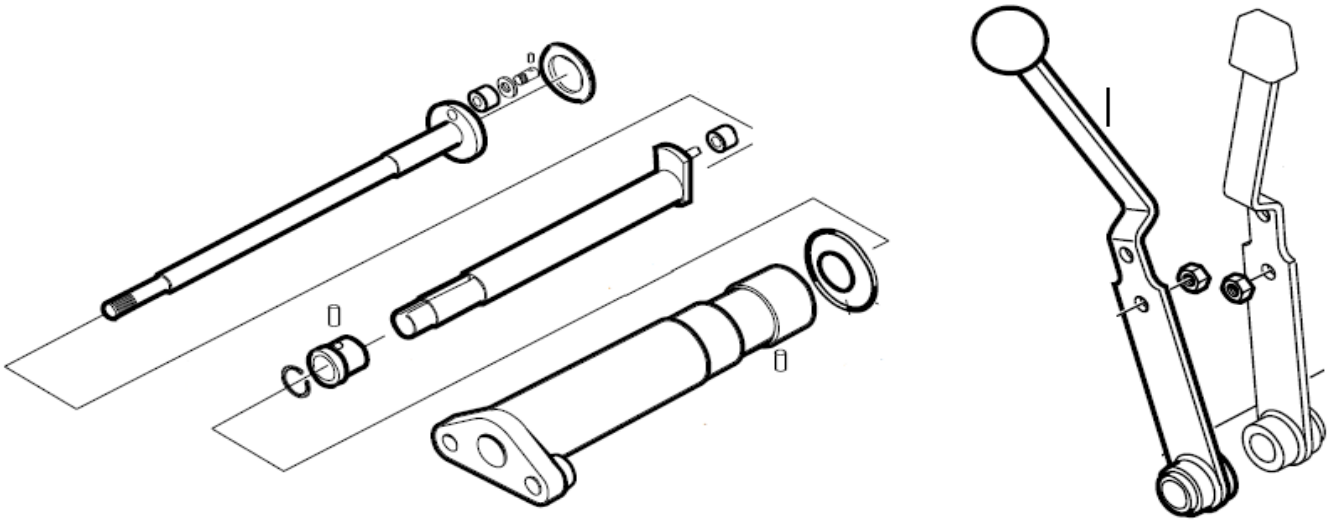

Description	Details	Part Number	Model	Picture
Support	Draft Control	**1870240M1**	100/200/ 300/400 Series	
Lever	Position Control Shaft MKIII	**1870340M91**	100/200 Series	
	Position Control Long MKIII	**1870341M91**	100/200 Series	

LIFT COVER & CYLINDER

LIFT COVER

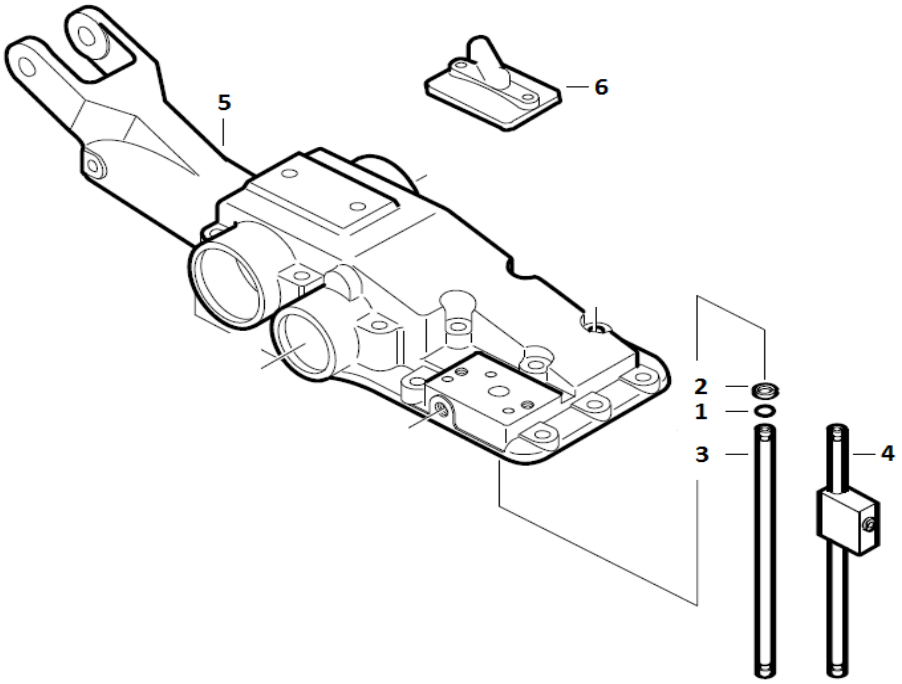

Description	Details	Part Number	Model	Refer to Number
O-ring	Stand Pipe	**195561M1**		1
Washer	Stand Pipe	**195874M1**		2
Stand Pipe	249mm	**1869119M1**		3
	317mm	**898229M1**		3
	317mm Regulator	**883788M91**		4
Lift Cover		**1693547M91**	100/200 Series	5
		3612130M91	300 Series	5
		2802511M4	400 Series	5
Cover	Stand Pipe	**180908M1**	All	6
Gasket	Lift Cover Top	**181408M1**	All	

LIFT COVER & CYLINDER

PLUNGER

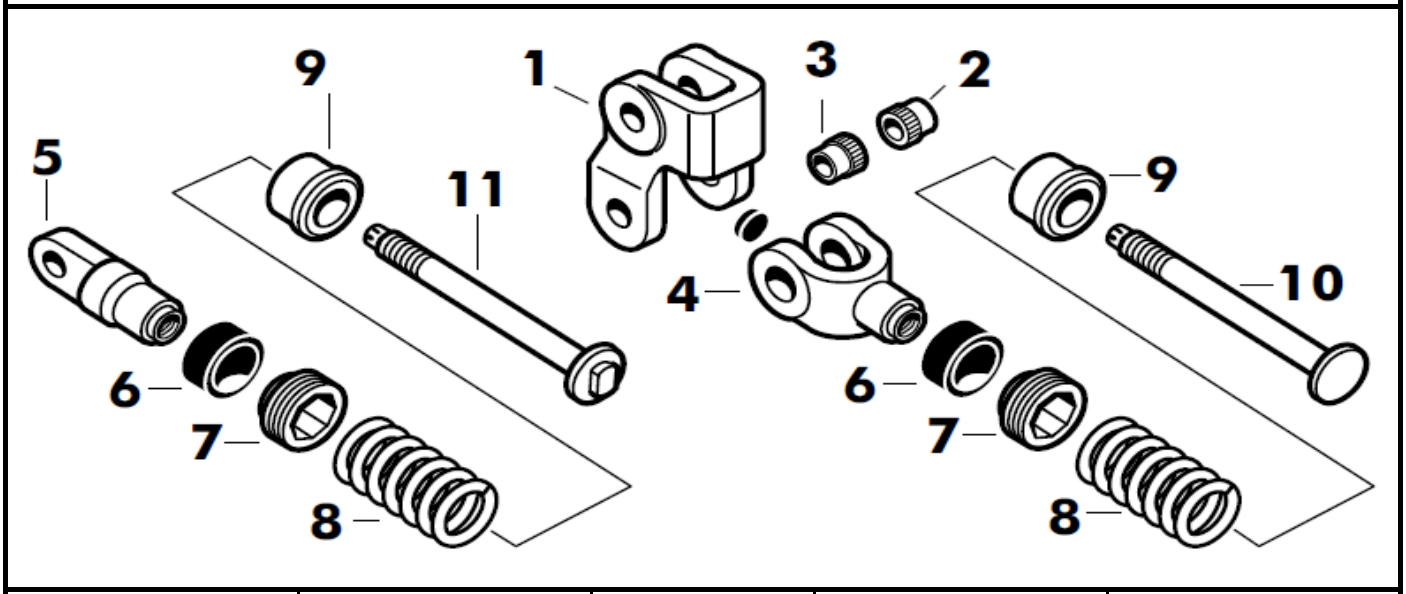

Description	Details	Part Number	Model	Refer to Number
Plunger Head	Draft Control	**180973M2**		1
Bush	Rocker Link	**181982M1**	All	2
		180974M1		3
Clevis	Draft Control U Shape	**180972M2**		4
	Draft Control Knob	**1863389M1**		5
Rubber Boot	Draft Control	**1660439M1** 887654M1		6
Nut	Draft Control	**180979M2**		7
Spring	Plunger	**182582M1**		8
Plunger	Seat	**182581M1** **886351M1**	All	9
	Draft Control	**182580M1**	MKI	10
		886348M2 898136	MKII & III	11

LIFT COVER & CYLINDER

RAM CYLINDER

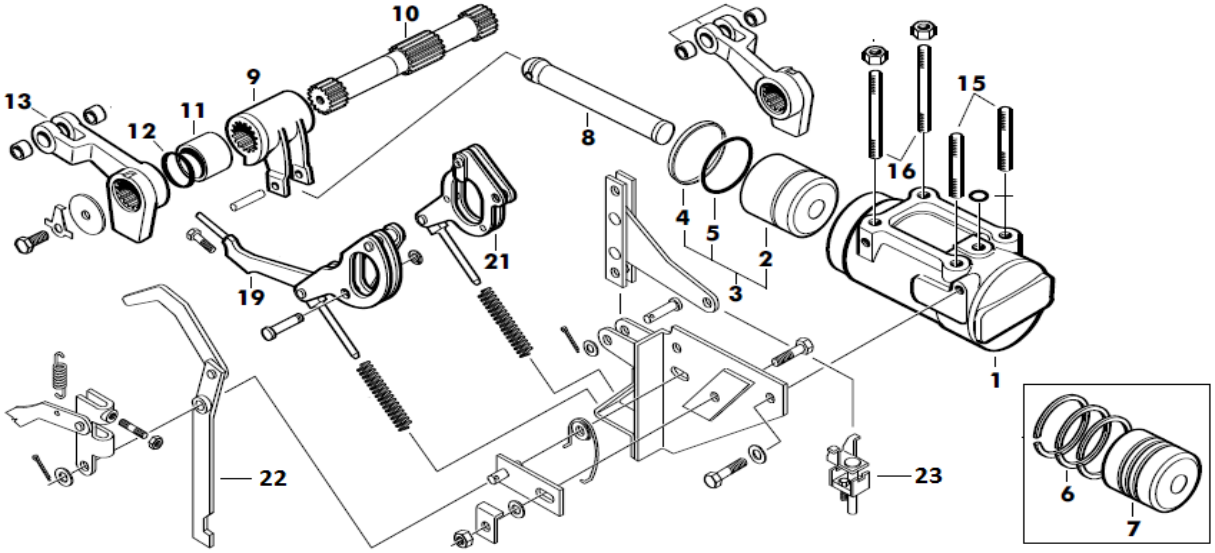

Description	Details	Part Number	Model	Refer to Number
Ram Cylinder	76mm	**184442M1**	MKI 35/65	1
	79mm	**897560M3**	MKII	1
	3 11/16"	**516571M3** 3599859M1	300/400 Series	1
	85mm	**1671082M1**	MKIII	1
Piston	Ram Cylinder	**034604N1**	400 Series	2
Piston Kit	Ram Cylinder 79mm	**1665737M91**		3
	Ram Cylinder 85mm	**1665738M91**		3
	Ram Cylinder 93mm	**1693921M93**	200/300 Series	3
Piston Ring	Ram Cylinder	**3412380M1**	400 Series	4
		034615P1	400 Series	4
Piston Seal Kit		**1665685M91**	100/200 Series	4+5
		3761473-76	200/300 Series	4+5

HYDRAULICS - LIFT COVER & CYLINDER - RAM CYLINDER **...CONTINUED**

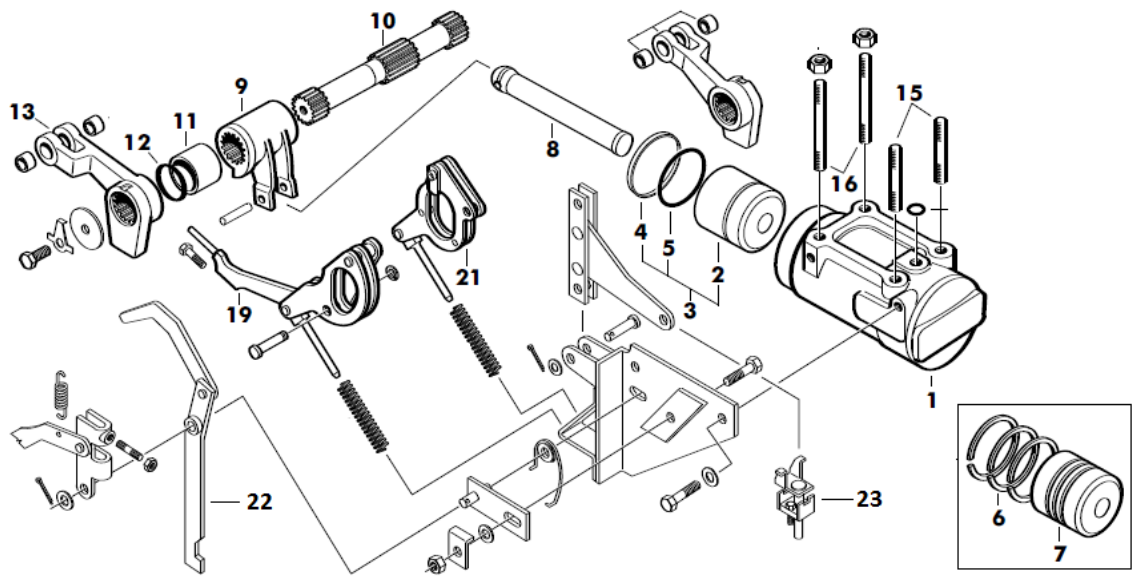

Description	Details	Part Number	Model	Refer to Number
Piston Seal Kit		**1665684M91** 2528201K	MKIII 100/200 Series	4+5
Piston O-ring	Ram Cylinder	**3412140M1**	400 Series	5
Piston Kit	Ram Cylinder 76mm	**184443M91**	MKI 35X-65X	7
Ring	Kit 76mm	**184447M1**	MKI	6
		897564M1	MKII	6
Piston Ring	Single	**897597M1**	MKIII	6
Piston Conrod		**3610356M2**	200/300 Series	8
		886410M1	MKII & MKIII	8
Arm	Cross Shaft	897568M1 **886405M1**	100/200 Series	9
		886404M2	100/200/400 Series	9
Cross Shaft		**897567M3**	MKII & MKIII 100/200/ 300/400 Series	10
Bush	Cross Shaft	**181018M1**	MKI 35/65	11
		1870934M1 886029M1	MKII III	11

HYDRAULICS - LIFT COVER & CYLINDER - RAM CYLINDER **...CONTINUED**

Description	Details	Part Number	Model	Refer to Number
O-ring	Cross Shaft	**195565M1**	MKI	12
		359136X1	MKII & MKIII	12
Lift Arms		**885444M91**	MKI	13
		1680040M91	MKII III	13
Stud	Ram Cylinder 9/16 x 3" UNF	**1667580M2**	100/200/ 300/400 Series	15
		1481941M2	400 Series	15
	Ram Cylinder 9/16 x 4" UNF	**1667579M2**	100/200 Series	16
Control Rod	Draft Control	**898124M1**	100/200/300 Series	19
Link	MKIII	**1661918M91**	100/200/300/400/4200	21
Lever	Draft Control	**1869093M93**	200 Series	22
Butterfly	Draft Control	**1868847M91**	MKIII & IIIA	23

PTO

Description	Details	Part Number	Model	Picture
Bearing	PTO Shaft Front	**834218M1**	100/200/300	
	PTO Shaft Rear	**195498M1**	100 Series	
C Clip	2" PTO Shaft	**377602X1**	All	

HYDRAULICS - PTO **...CONTINUED**

Description	Details	Part Number	Model	Refer to Number
Gasket	PTO Lever Cover	**181217M3**		
Gear PTO	38T CS	**184190M1**	100 Series	
Gear PTO	38T FS	**532907M1**	100/200 Series	
Lever	Engaging Inner 3 Hole	**1870594M91**	100/200 Series	
Lever Knob		**1877461M1**	100/200/300 Series	
Needle Bearing	PTO Shaft End	**195453M1**		
O-ring	Retainer	**1004633M1**		
	Sleeve	**195522M1**	100 Series	

HYDRAULICS - PTO **...CONTINUED**

Description	Details	Part Number	Model	Refer to Number
PTO Seal	Tin Casing	**1860325M1**	35X/65/100 Series	
	New Same As 2418F436	**834216M1**	100/200 Series	
		3699801M1	300 Series	
PTO Lever	Outer	**1672622M91**	100/200 Series	
PTO Shaft	603mm 6 Spline	**181204M92**	35X/65/135/175/178	
	610mm 6 Spline	**1868557M93**	135/165	
	610mm 6 Spline	**1660288M91**	200 Series	

HYDRAULICS - PTO **...CONTINUED**

Description	Details	Part Number	Model	Refer to Number
PTO Shaft	613mm 540 RPM 2 Speed	**532899M1**	200/300 Series	
	510mm 540 RPM Short	**3611482M92**	300 Series	
	610mm 6 Spline	**3599003M92**	300/400 Series	
	540 RPM 24 1/8"	**3599000M1**	300/400 Series	
Retainer		**180465M1**	35X/65/100 Series	
	PTO Shaft	**532880M1**	135/240	
Stud	PTO	**1860900M1**	100/200/ 300/400 Series	

INSTRUMENTS

GAUGES

Description	Details	Part Number	Model	Picture
Guage	Ammeter	**36047**	35/65/100 Series	
		1672835M2	200 Series	
Guage	Fuel	**898418M1**	100 Series	
		1877717M92	200 Series	
	Fuel 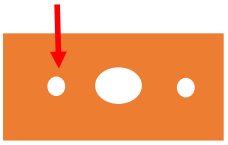	**062783R1** 069105R1	400 Series	LANDBOUPART
	Fuel 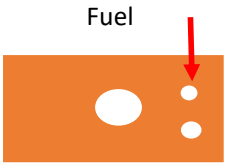	**6217998M1**	400 Series	LANDBOUPART
Guage	Oil Pressure	**1853097M91** 3381907M1	35/65/100 Series	

INSTRUMENTS - GUAGES **...CONTINUED**

Description	Details	Part Number	Model	Refer to Number
Guage	Temperature	**881396M91**	100 Series	
		1877719M92	200 Series	
	Temperature 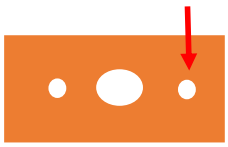	**062782R1**	400 Series	LANDBOUPART
	Temperature 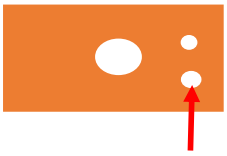	6221177M1	400 Series	LANDBOUPART

HORNS

Description	Details	Part Number	Model	Picture
Horn		**1678404M1**	All Series	LANDBOUPART

HOUR METERS

Description	Details	Part Number	Model	Picture
Hour Meter		**890223M91**	35X	
	6 Speed	**899423M92** **899425M1**	135	
	8 Speed	**1860018M91**	135	
	6 Speed	**899421M92**	165/175/178/185/188	
	8 Speed	**1860065M91**	165/188	
	8 Speed	**1674638M92**	240	
	8 Speed	**1674637M91**	200 Series	

INSTRUMENTS - HOUR METERS **...CONTINUED**

Description	Details	Part Number	Model	Refer to Number
Hour Meter	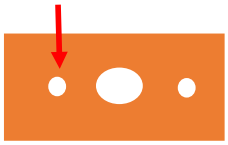	**067265R1**	400 Series	
		6217994M1	400 Series	
Hour Meter Cable		**882539M91**	35/65/135/240	
		882021M91	100/200 Series	
Hour Meter Drive	6/8 Speed Small Head	**2758346** 1853144M1	100/200 Series	
Housing	Hour Meter	**37416751**	35X/135/240	
Housing Seal	Tacho Drive	**30854**	135-35X	

RELAYS, SENDER UNITS & SWITCHES

Description	Details	Part Number	Model	Picture
Key	Ignition Switch	**3813361M1** **893930M1**	All	
Knob	Light Switch	**1668830M91**	200 Series	
Relay		**069120T1**	400 Series	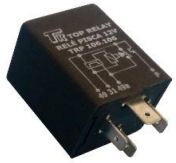
		6203146M1	400 Series	
Sender Unit	Oil	**1877721M92**	100/200 Series	
		3599307M91	300 Series	
		6280485M1	400 Series	

INSTRUMENTS - RELAYS, SENDER UNITS & SWITCHES **...CONTINUED**

Description	Details	Part Number	Model	Refer to Number
Sender Unit	Temperature	**3147425M1**	400 Series	
		1877731M92	200/300/2000/ 4200/6100 Series	
Starter Switch		**35630** 34228 **35670** 1874535 **1874120M93**	100/200/300/400 Series	
Switch		**3809149M91**	5400/6400	
Switch	Brake Light	**1874709M1**	200 Series	
	Brake	**3762867M91**	300/43/53	
	Fuel Cut Off	**1896464M1** 28730179	398/399/400/ 4200/6100 Series	

INSTRUMENTS - RELAYS, SENDER UNITS & SWITCHES **...CONTINUED**

Description	Details	Part Number	Model	Refer to Number
Switch	Hand Brake	**4293575M1**	5400/6400 Series	
	Light With Horn	**1699034M91**	200 Series	
	Light	**881670M1**	200/2000	
		3713669M4	5400/6400 Series	
	Safety Gearbox	**1679223M2** 963417M2	100/200/300/ 2000/6100 Series	
	Transmission	**4284309M1**	5400 Series	

ROCKER SWITCHES

Description	Details	Part Number	Model	Picture
Rocker Switch	Hazard Light	**071647T1**	400 Series	
	High Beam	**071643T1**	400 Series	
	Indicator	**071646T1**	400 Series	
	Main Beam	**071642T1**	400 Series	
	Plough Light	**071645T1**	400 Series	

LIGHTS

HEAD LAMPS

Description	Details	Part Number	Model	Picture
Head Light	Round Metal LH & RH	**54052554**	100 Series	
	LH	**1672769M91**	200 Series	
	RH	**1672768M91**	200 Series	
	LH & RH	**1693943M93** **1693944M93**	300 Series	
	Round	**6263123M91**	400 Series	
	Square LH/RH	**6200027M91**	400 Series	
Plough Light	Steel	**886997M91**	100 Series	

LIGHTS - HEAD LAMPS **...CONTINUED**

Description	Details	Part Number	Model	Refer to Number
Plough Light	Plastic	**1678582M91**	200 Series	
		3595442M91	300 Series	
	Plastic	**3699508M91**	300 Series	
		022661T1	400 Series	

REAR LIGHTS

Description	Details	Part Number	Model	Picture
Light	LH / RH Parking	**3699489M92**		
	Rear LH & RH Flat Fender	**1424346M1**	154/174/194/254/274	

LIGHTS - REAR LIGHTS **...CONTINUED**

Description	Details	Part Number	Model	Refer to Number
Light	LH / RH Front 3 Cyl	**1678580M91**	240	
	LH / RH Rear Shell Fender	**1682738M91**	240	
	Fender Front LH	**1678991M91**	200 Series	
	Fender Front RH	**1678990M91**	200 Series	
	Fender Rear LH	**1678868M91**	200 Series	
	Fender Rear RH	**1678869M91**	200 Series	
	Rear Brake LH/RH	**3699490M92**	300/4200	

LIGHTS - REAR LIGHTS **...CONTINUED**

Description	Details	Part Number	Model	Refer to Number
Light	Brake LH / RH	**3699491M92**	300/4200	
	Fender Rear LH/RH	**1695847M91**	300 Series	
	Front Signal	**1695628M91**	300 Series	
	Fender Square Rear LH	**6202001M91**	400 Series	
	Fender Square Rear RH	**6202002M91**	400 Series	
	Fender Square Plough Light	**6221297M91**	400 Series	
	Fender Square Front Signal	**6230877M91**	400 Series	

LIGHTS - REAR LIGHTS **...CONTINUED**

Description	Details	Part Number	Model	Refer to Number
Light	Rear	**6313877M91**	400X Series	
	Rear	**6313878M91**	400X Series	

REAR AXLE

CROWN WHEEL & PINION

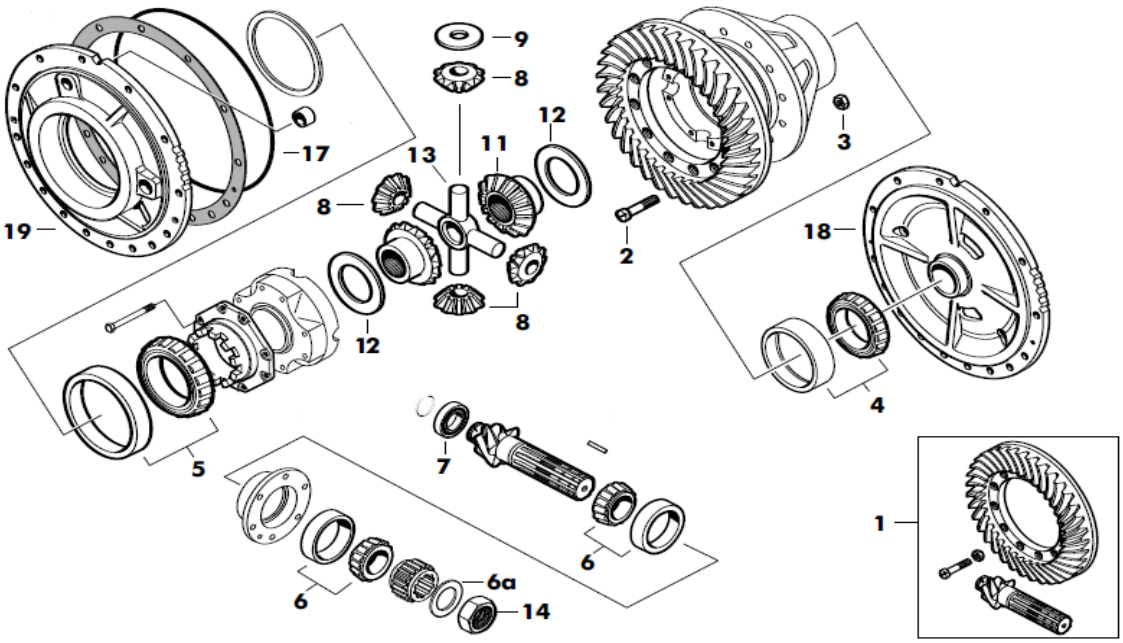

Description	Details	Part Number	Model	Refer to Number
Crown Wheel & Pinion	6x37 240mm Short	**1885317M92**	35/135	1
	6x37 255mm Long	**1683757M91**	135/240	1
	11x38	**1664255M92** **4200006M91**	100 200 400	1
	9x35	**1665438** **4200008M91**	200 400 Series	1
	8x35	**1688760M3**	300 Series	1
Bolt	Crown Wheel 12x	**825776M1**		2
Nut	Crown Wheel 12x	**891947M1**		3
Bearing	Carrier 3984/3920	**1851533M91**	100 200	4 +5
	Carrier	**1860503M93**		4 + 5
	Carrier 37425/37625	**1850909M91**	400	4 + 5
	Pinion Rear 2x	**1850090M92** HM903249 HM903210		6

REAR AXLE - CROWN WHEEL & PINION **...CONTINUED**

Description	Details	Part Number	Model	Refer to Number
Bearing	Pinion Front 62 x 30 x 20	**191250M1**		7
Gear	Small 14T 4x	**897725M1**		8
Washer	Small 4x	**514958M1**		9
Gear	Large 2x	**885518M1**		11
Washer	Large 2x	**897726M1**		12
Cross		**894302M2**		13
Nut	Pinion 1x	**532956M1**		14
O-ring	Housing	**1860838M1**	100 200 400 Series	17
Plate	LH	**1687864M3**	100 200 Series	18
	RH	**1860882M1**	100 200 Series	19
Carrier	Crown Wheel	**882783M92**		

SIDE SHAFT (DISC BRAKES)

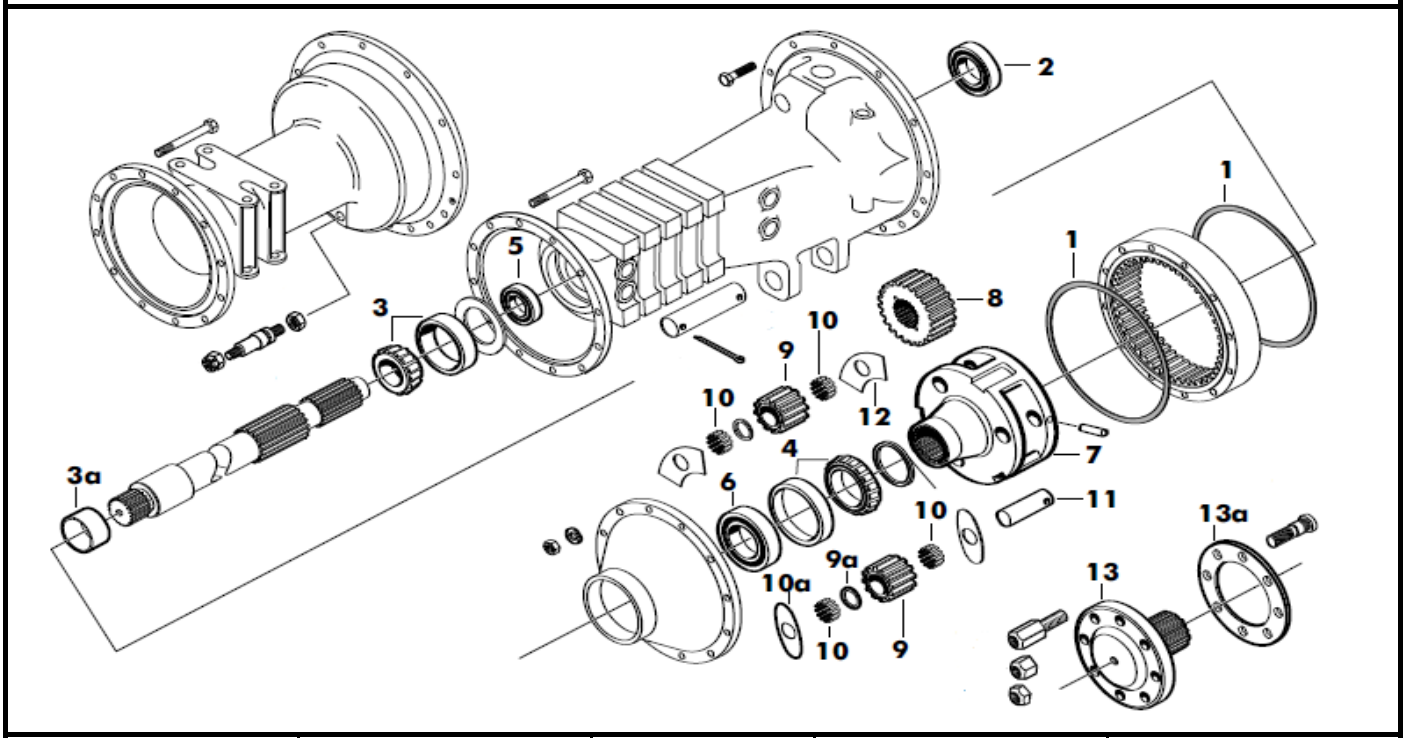

Description	Details	Part Number	Model	Picture
Gasket	Cover	**184182M3**	LD	1
		516389M1	HD	1
Seal	Inner Dry Brake	**881021M93**	100 Series	2
Bearing	Inner Timken Type ID = 82.55mm OD = 125.41mm Depth = 25.40mm	**1881931M1**	100 200 LD 300	3
Bush	Side Shaft	**894778M1**	135/240	3a
Bearing	Carrier Outer Timken Type ID = 66.68mm OD = 110.00mm Depth = 22.00mm	**1851392M91**	100 200 300 LD	4
	Carrier Outer Timken Type ID = 73.03mm OD = 112.71mm Depth = 25.40mm	**1860503M93**	290 HD 300 HD	4

REAR AXLE - SIDE SHAFT (DISC BRAKES) **...CONTINUED**

Description	Details	Part Number	Model	Refer to Number
Seal	Inner	**881991M1**	65	5
	Inner Dry Brake	**894782M2**	100 Series	5
	Inner Wet Brake	**1860954M1**	100 200 400 Series	5
	Outer	**894763M4**	Early	6
		3699800M1	Later	6
Carrier	Side Shaft	**1864872M1**	100 200 300 LD	7
		1687885M1	300 HD	7
Gear Sun	21T	**897005M1**	100/200/400 Series	8
	16T	**1693733M1**	300 Series LD	8
Gear Small	12T	**894769M1**	100/200/400 Series	9
	13T	**1693734M1**	300 Series LD	9
	20T	**1692736M2**	300 Series HD	9
Washer	Carrier	**184196M1**	100/200/400 Series	9a
Needle Roller		**184742M1**	174x 100 200 Series	10
		1686990M1	300 HD	10
Washer	Carrier	**184441M1**	100/200/400 Series	10a
Pin	Pinion Gear With Hole	**1864869M1**	100 200 300 LD	11
Washer	Carrier	**894867M1**	100/200/300/400 Series	12
Side Shaft	LD	**884850M3**	100/200/300 Series	13
	HD	**1808206M3**	188/290/300 Series	13
Washer		**894756M1**	100/200/300/400 Series	13a

REAR AXLE - SIDE SHAFT (DISC BRAKES) **...CONTINUED**

Description	Details	Part Number	Model	Refer to Number
Seal	Side Shaft Outer	**022517P1**	400 Series	
Ring Gear		**894772M1**	100/200/400 LD	

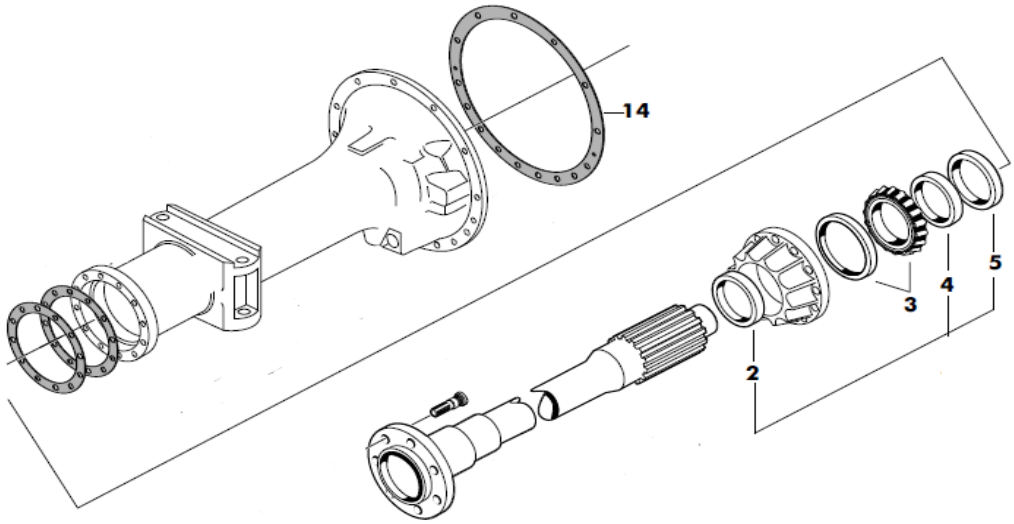

Description	Details	Part Number	Model	Refer to Number
Seal	Outer	**195677M1**	135/240	2
Bearing	Timken Type ID = 50.80mm OD = 93.26mm Depth = 30.30mm	**1850088M91** **884791M92**	35/135/240	3
Sleeve / Collar		**180596M1**	35X / 135 / 240	4
Seal	Inner Dry	**195678M2**	135/240	5
Gasket	Trumpet Housing	**183254M1**	35/135/240	14

REAR AXLE - SIDE SHAFT (DISC BRAKES) **...CONTINUED**

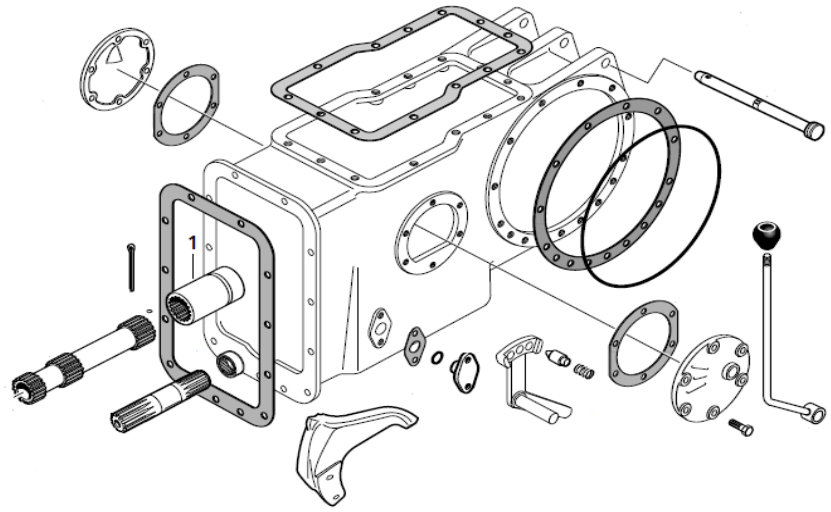

Description	Details	Part Number	Model	Refer to Number
Coupling	127mm x 54mm 2 Groove	**880069M2**		1
	57X97mm	**1680189M91**		1
	3 Groove	**880070M2**		1
Coupler	Diff 39 Splines	**897003M3**	100/200/300/400 Series	
Housing Diff		**1696439M1**	200/300 Series	
		3599718M3	300 Series	
		045608P2	440X	
	Side Driven 4WD	**6210904M2**	400 Series	
		054550N1	5300 Series	
		1664511M2		
	Side Drive	**036315P2**	400 Series	
	Centre Drive	**022334P5**	400 Series	

REAR AXLE - SIDE SHAFT (DISC BRAKES) **...CONTINUED**

Description	Details	Part Number	Model	Refer to Number
Housing Trumpet	LH	**1666930M3**	LD 100 200 Series	
	RH	**1666929M3**	LD 100 200 Series	
	RH	**3595144M2**	300 HD	
	LH	**1666936M4**	300 HD	

OTHER

Description	Details	Part Number	Model	Refer to Number
Dipstick		**1684256M91**	200/300 Series	
Housing	Side Cover Side Shaft Cover	**894781M1**	100/200/300 LD	
Shaft	Carrier HD 3x	**516390M1**	290	
Side Shaft	Heavy Duty	**3599712M1**	290/390/399	
Roll Pin		**1864852M1**	100/200/300/400 Series	

REAR AXLE **...CONTINUED**

STUD & NUT

Description	Details	Part Number	Model	Picture
Bolt	5/8" x 18 Front & Rear	**3408246M1**	All Wheel	
Bolt	9/16" UNF x 50mm	**185400M1**	35/135/240	
Nut		**180004M1**	35/135/240	
Stud	5/8" UNF x 55mm	**893017M2**	65 100/200 Series	
Nut		**184273M1**	65 100/200 Series	
Nut		**881162M1**	65 100/200 Series	

REAR AXLE - STUD & NUT **...CONTINUED**

Description	Details	Part Number	Model	Refer to Number
Stud	11/16" x 60mm	**847416M1**	290/399	
Nut		**847417M1**	290/399	
Nut		**1872458M1**	290/399	

RIM TO DISC

Description	Details	Part Number	Model	Picture
Bolt	5/8" UNF x 72mm Rear Wheel	**828217M2**	100/200 Series	
Nut		**353427X1**	100/200 Series	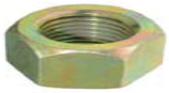

STEERING

ORBITROL STEERING UNIT

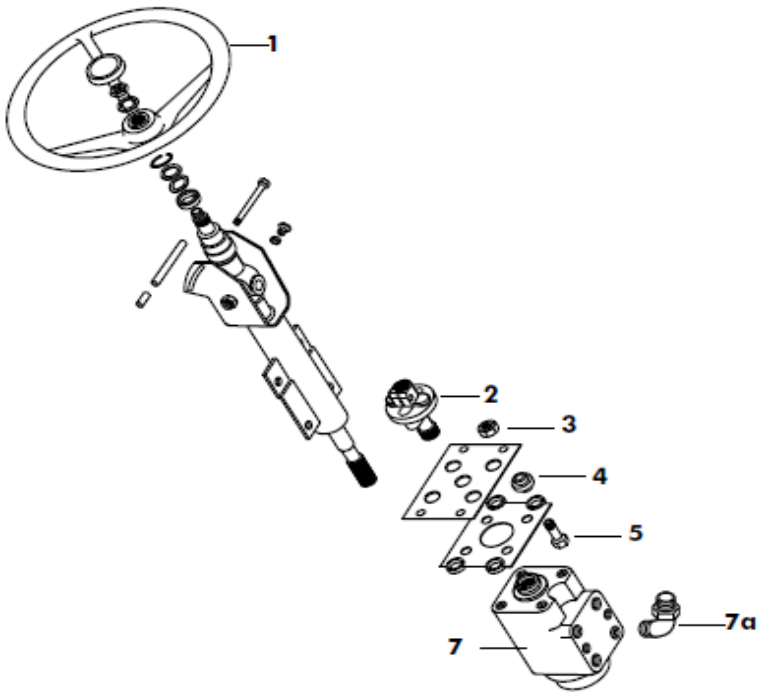

Description	Details	Part Number	Model	Refer to Number
Steering Wheel + Cap		3774838M1	300/4200 Series	1
		058019P1	400 Series	1
Steering Coupler		3595956M1	300/4200 Series	2
Orbitrol	125cc	**1695445M91**	300/4200 Series	7
Steering Pump	Single	**052207T1**	400 Series	7
	Double	**052107T1**	400 Series	7
Orbitrol	2WD	**047161T1** 3305003	400 Series	7
	4WD	**047153T1**	400 Series	7

STEERING - ORBITROL STEERING UNIT **...CONTINUED**

Description	Details	Part Number	Model	Refer to Number
Seal Kit	Orbitrol	**1810503M91**	300/4200 Series	
		048831R1	400 Series	

POWER STEERING KIT

Description	Details	Part Number	Model	Picture
Power Steering Kit	Complete	**MF18-850**	135 240	
		MF18-800	100 200 Series	
	Hydrostatic	**MF18-800H**		
Repair Kit Power Steering Linkage	Includes: 182723 1x 881727 1x 881729 1x 375108 1x 353430 1x	**MF18-547**	290	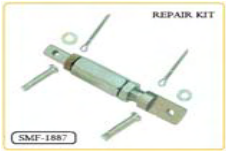

STEERING BOX - 35X/135/240

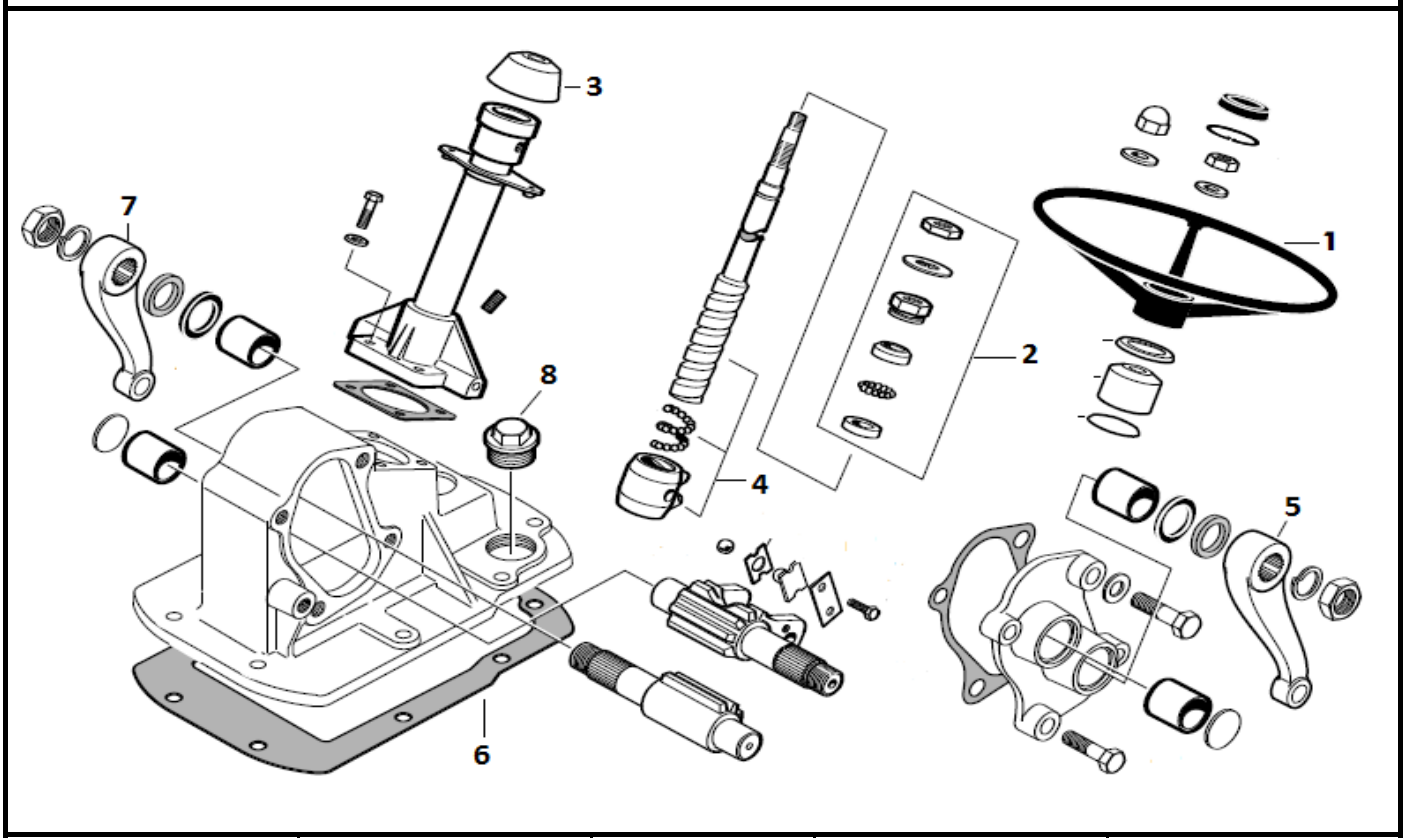

Description	Details	Part Number	Model	Refer to Number
Steering Wheel	Key Type	**1894488M1**		1
	Spline Type	**1673006M1** **1691798M1**		1
Repair Kit	Steering Box	**13535XX12**		2
Dust Boot	Steering Shaft	**1863359M1**		3
Steering Worm	Steering Box 537mm	**1850003M92**		4
	Steering Box 567mm	**1867192M91**		4
	Steering Box 574mm	**1890727M91**		4
Drop Arm	LH	**1850021M1**		5
Gasket	Steering Box to Gearbox	**180511M2**		6
Drop Arm	RH	**1850022M1**		7
Oil Cap	Steering Box	**768300M1**		8

STEERING - STEERING BOX - 35X/135/240 **...CONTINUED**

Description	Details	Part Number	Model	Refer to Number
Steering Box	Complete	**1673663M91**		
Steering Column	Hydrostatic	**3811256M92**	4200/5300 Series	
		1686590T92	300 Series	

STEERING BOX - 100/200 SERIES

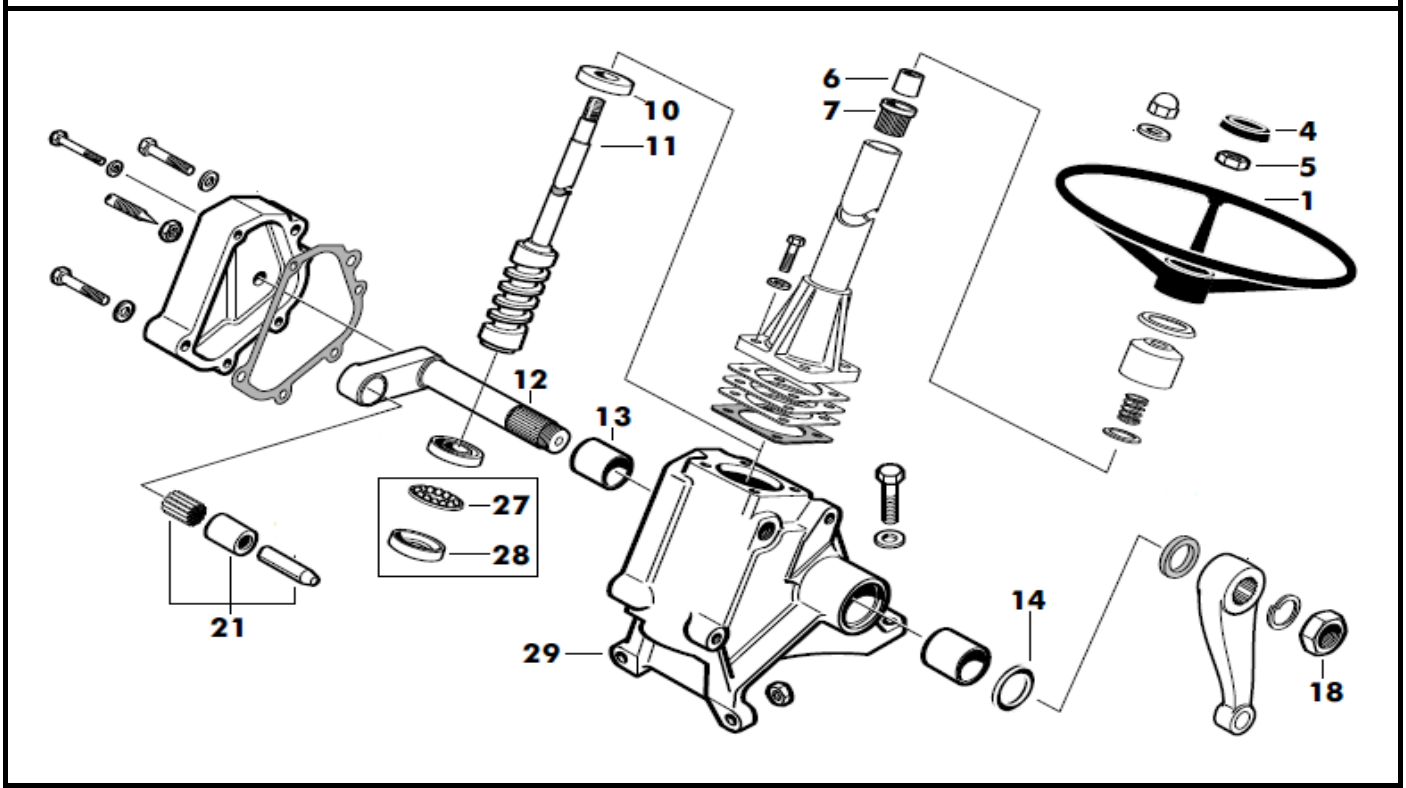

Description	Details	Part Number	Model	Refer to Number
Steering Wheel	Steering Box	**1671945M1**		1
Steering Wheel Cap		**1870806M91**		4
Nut	Steering Wheel	**1853123M1**		5
Bush	Inner	**1853112M1**		6
	Rubber Outer	**1853210M1**		7
Bearing	Steering Box	**1883133M91**		10
		3473264M1	200 Series (To Serial)	10
Steering Worm		**1805743M92**		11
		3473254M91 1675411M91		11
Rocker Shaft	Steering Box	**1805744M91**		12
Rocker Shaft Bush	Steering Box	**1850517M1**		13
Seal	Steering Box	**1850519M1**		14

STEERING - STEERING BOX - 100/200 SERIES **...CONTINUED**

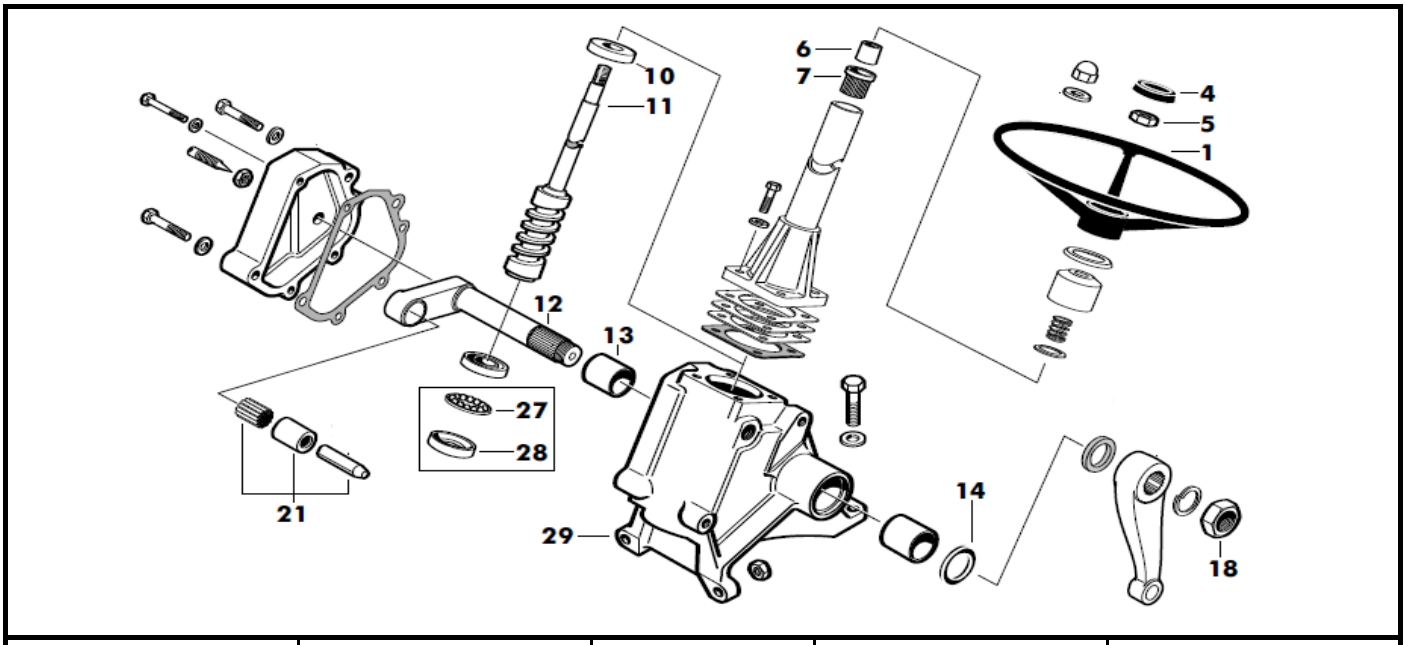

Description	Details	Part Number	Model	Refer to Number
Drop Arm	Steering Box	**1853138M1**		17
Drop Arm Nut	Steering Box	**353460X1**		18
Rocker Shaft Guide	Steering Box	**1806227M91***		21
Bearing	Steering Box	**1850526M91**	50/65	27
		1850527M1	50/65	28
Housing	Steering Box	**1853098M91**		29
	Steering Box New Type	**22001503**	100/200 Series	29
Rocker Shaft Kit	Steering Box	**1424299M91**	100/200 Series	
Steering Box	Complete	**1687020M92**		

STEERING BOX - SHAFT & ARMS

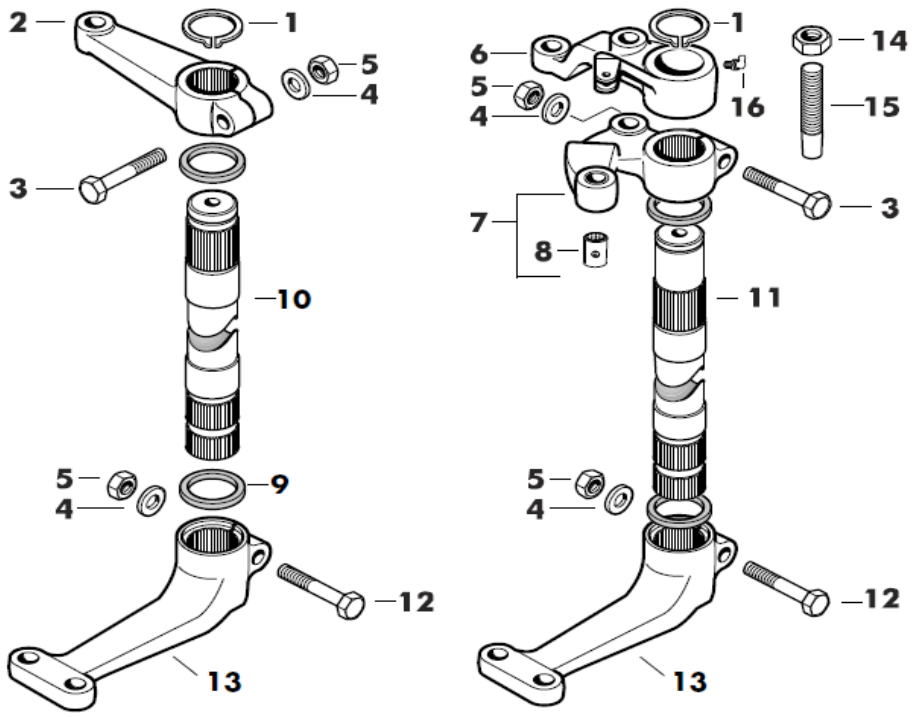

Description	Details	Part Number	Model	Refer to Number
Circlip	Steering Shaft Top	**355917X1**	100/200/400 Series	1
Steering Arm	Upper Manual	**898354M1**	100/200 Series	2
	Upper Top PS	**1671335M1**	290	6
	Upper Bottom PS	**898355M91**	290	7
Bush	Upper Bottom PS Arm	**190560M1**	290	8
Seal Dust	Felt	**183021M2**	100/200/400 Series	9
Steering Shaft	Short Manual	**1676666M1**	100/200/400 Series	10
	Long PS	**1676665**	290	11
Steering Arm	Lower	**1676664M1**	100/200/400 Series	13
Nut		**353436X1**	290	14
Pin	Arm Power Steering	**182725M1**	290	15

STEERING CYLINDER & KIT

Description	Details	Part Number	Model	Picture
Pin	PS Cylinder Support	**898363M1**	290	
Repair Kit	Steering Cylinder	**2730954M91**	400 Series 2WD	
Seal Kit	For 3186320M91	**1606890M91**	290	
	Steering Cylinder 3186320M91	**1810437M91**	290	
	Steering Cylinder	**3484807M91**	NG	
Shaft	Cylinder Ram Bolt Type	**1885795M1**		
	Cylinder Ram Nut Type	**1606882M3**		

STEERING - STEERING CYLINDER & KIT **...CONTINUED**

Description	Details	Part Number	Model	Refer to Number
Steering Cylinder	Without Valve	**1605121M92**	265S/285S 275E/390E	
	Complete Cylinder Inside Nose With Valve	**3186320M91**	290	
	Complete WO Tie Rods	**3763762M91**	300 Series	
		3429989M91	300/4200 AG	
	Complete Cylinder Inside Nose Without Valve	**3148318M92** 1606121	400 Series 2WD	
Valve	PS Cylinder	**3186321M91**	290	

STEERING PUMP

Description	Details	Part Number	Model	Picture
Gasket	PS Pump	**897148M4**	290	
Drive Gear	PS Pump	**897159M1**	290	
	Steering Pump (052107)	**3412000**	400 Series	
Filter	Steering Pump	**1662566M1**	290	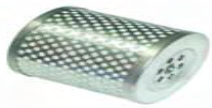
Repair Kit	PS Pump	**1810509M91** 1810417	290	
Steering Pump		**773126M92**	240	
		897146 **897147M95**	290	

STEERING PUMP **...CONTINUED**

Description	Details	Part Number	Model	Refer to Number
Steering Pump		3701005 **3774612M91**	365 375 390	
		3595383 **3597420M91**	399 6.354	
		3701006 **3774613M91**	399SE 1006.6	
	Single	**052207T1**	440	
	Double	**052107T1**	440 460 650	
		041683T1	475	
		3382280M1	3000 6100 6200 Series	
		3616909M91 3800194 **3816912M91** 3816913	4200 5300 Series	

TIE ROD

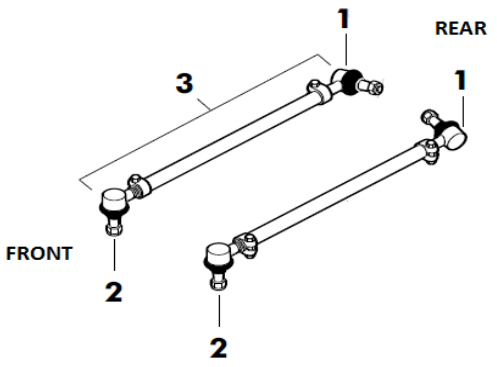

Description	Details	Part Number	Model	Refer to Number
Tie Rod	Rear	**826752M92**	35X/135 Bent Axle	1
Tie Rod	Front	**1862029M91**	35X/135 Bent Axle	2
Drag Link	Complete	826749M92	35X/135 Bent Axle	2

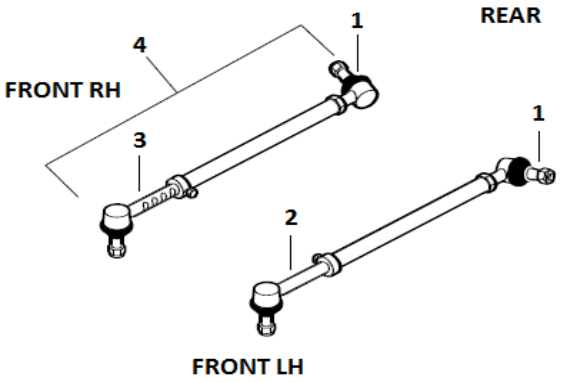

Description	Details	Part Number	Model	Refer to Number
Tie Rod	Rear	**826752M92**	135/240 Manual	1
	Front LH	**1860408M2**	135/240 Manual	2
	Front RH	**1860412M2**	135/240 Manual	3
Drag Link	Complete	1860410M92 **1860411M92**	135/240 Manual	4
	Tube Only	**1860413M2** **1860409M1**	135	4

STEERING - TIE ROD **...CONTINUED**

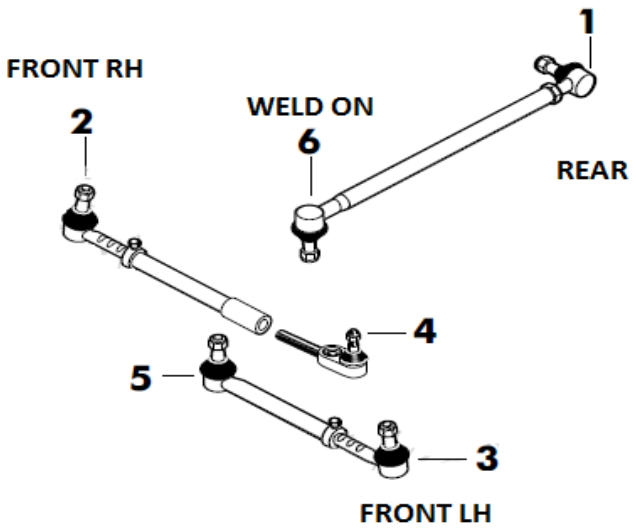

Description	Details	Part Number	Model	Refer to Number
Tie Rod	Drag Link Rear	**884701M92**	65/175/178 LD HD	1
	Outer RH	880009M92	65/175/178 LD	2
		880010M92	65/175/178 HD	2
	Outer LH	**880008M92**	65/175/178 LD	3
		894173M92	65 HD	3
	Inner RH	182519M91	65 LD	4
		894654M91	65 HD	4
		881889M1	175/178 HD	4
	Inner LH	186061M91	65 LD	5
		894125M91	65 HD	5

STEERING - TIE ROD **...CONTINUED**

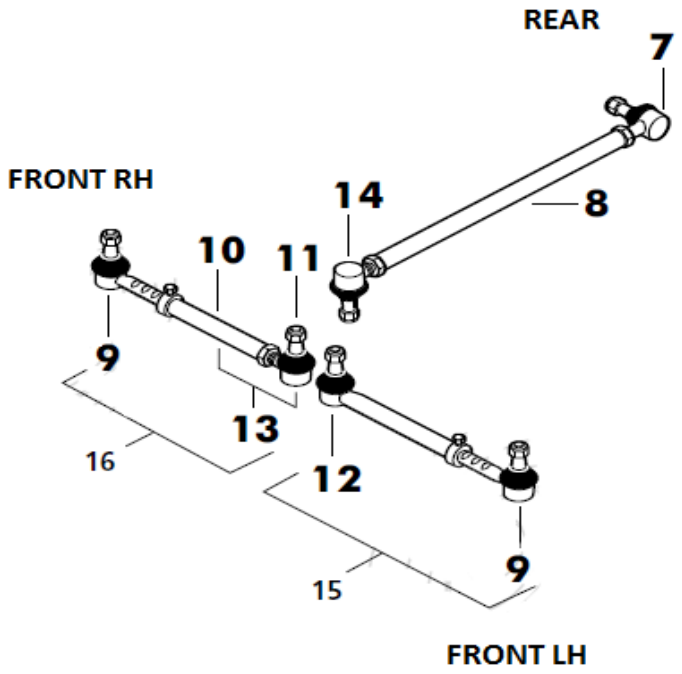

Description	Details	Part Number	Model	Refer to Number
*290PA = Power Assisted / 290HS = Hydrostatic Steering				
Tie Rod	Drag Link Rear	**884701M92**	165/168/185/188 265/275/290PA	7
Drag Link	1175mm	**885549**	188/290	8
	1107mm	**884797M91**	165/168/185/188 265/275	8
Tie Rod	Outer LH & RH	**881736M92**	165/168/185/188 265/275/290PA/290HS	9
Tie Rod & Tube		**886801M91**	165/168/185/188 265/275/290PA/290HS	10
Tie Rod		**886802M91**	165/168/185/188 265/275/290PA/290HS	11
	Inner LH & RH	**886797M91**	165/168/185/188 265/275/290PA/290HS	12
		1810366M1	165/168/185/188 265/275/290PA/290HS	13
		Weld On	165/168/185/188 265/275/290PA	14

STEERING - TIE ROD **...CONTINUED**

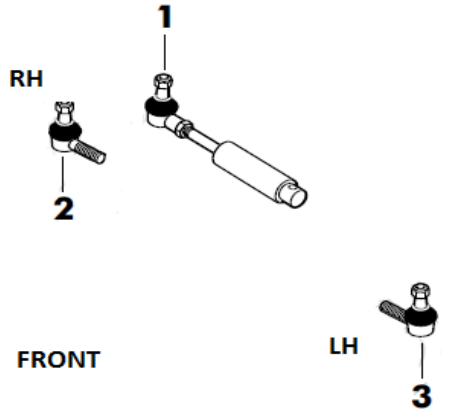

Description	Details	Part Number	Model	Refer to Number
Tie Tod	Cylinder	**3426660M1**	200/300 Series	1
		3427168M2	365/375/390/398/ 399 4WD	1
	Drag Link Screw In	**3426773M1**	365/375/390/398/ 399 4WD	2 + 3

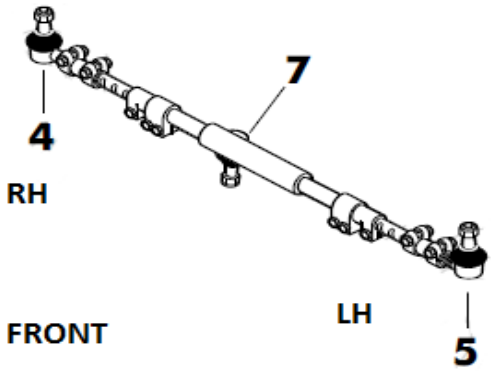

Description	Details	Part Number	Model	Refer to Number
Tie Rod	Clamp Bolt	**3599679M91**	300/4200/5300/5400 Series	4
	Thread	**3595527M91**	300 Series (To Serial)	5
	Clamp Bolt	**3599679M91**	300 Series (From Serial) 4200/5300/5400 Series	5
Toggle	Cylinder	**1695045M91**	300/4200/5300/5400 Series	7

STEERING - TIE ROD **...CONTINUED**

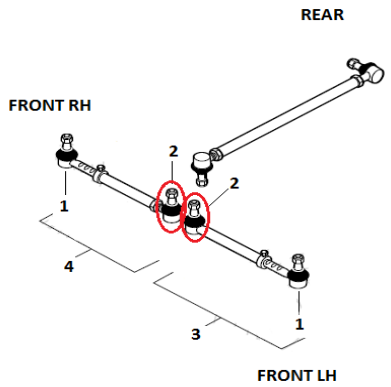

Description	Details	Part Number	Model	Refer to Number
Tie Rod	Outer	**1481537M93**	425/435/440/460 2WD	1
	Inner	**1482009M91**	425/435/440/460 2WD	2
	Complete LH	**033907T1**	425/435/440/460 2WD	3
	Complete RH	033906T1	425/435/440/460 2WD	4

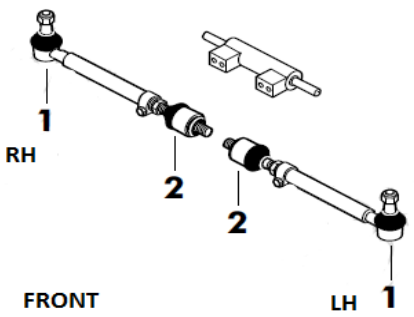

Description	Details	Part Number	Model	Refer to Number
Tie Rod		**3429173M2**	4200 Series	1
		3764027M2	200E/300E/4200/5400/6100/6400	1
Tie Rod End		**3764028M1**	4200 5400 6100 398 399	1
Toggle		**3428268M1**	240/4200 Series AG65	2
		3426255M1	3100/3600/6100/8100	2
		3426312M1	300 4200 6100 AG75 85 105	2

OTHER

Description	Details	Part Number	Model	Picture
Ball Joint		**3904168M91**	4200 Series	
Boot	Tie Rod	**1885486M91**	100/200 Series	

THREE POINT

DRAWBAR

Description	Details	Part Number	Model	Picture
Drawbar		**872142M91**	135 240	
		MF20-554	100 200 300	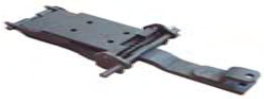
Drawbar & Clevis		**872149M1**	35/135/240	
Hitch Pin	19 x 98mm	**3405310M91**		

THREE POINT - DRAWBAR **...CONTINUED**

Description	Details	Part Number	Model	Refer to Number
Hitch Pin	19 x 157mm	**3405311M91**		
	19 x 180mm	**S80**		
Lower Link Drawbar	CAT I	**180485M1**		
	CAT II	**829032M1**		
Nut	Drawbar 3/4" UNF	**353435X1**	100/200	
Stud	Drawbar 3/4" UNF	**899304M1**	35/135/240	
	Drawbar With Spacer 7/8 22mm	**886160M1**		

LEVELING BOX

Description	Details	Part Number	Model	Picture
Clevis Pin	3/4"	**893567M1**	100/200	
	5/8"x3 3/16	**376399X1**		
	7/8"	**893568M1**	100/200	
Knuckle		**897653M2**	100/200/300 Series	
Level Assy	Yoke / Fork / Knuckle / Pin	**MF20-193** 1884720M1	35	
		MF20-180	135/240	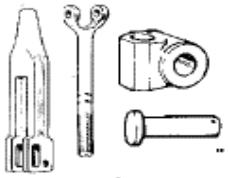
		MF20-190	188/290	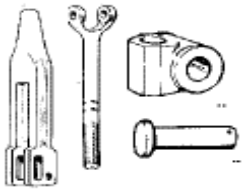

THREE POINT - LEVELING BOX **...CONTINUED**

Description	Details	Part Number	Model	Refer to Number
Levelling Box		**1660373M92** 1884342 Peco # P158	135 240	
		897649M95 Peco # P444	100 200 LD	
		1660438M92 1863053 Peco # P575	100 200 HD	
	HD Xtra Lift	**1863053M94**		
		1693991M95	399	
	Short Opposite Side	**S74666**	399	
Yoke		**1660372M95**	135 240	

THREE POINT - LEVELING BOX **...CONTINUED**

Description	Details	Part Number	Model	Refer to Number
Yoke		**897655M92**	100 200 LD	
		1863888M91	100 200 HD	

LEVELING BOX - 400 SERIES

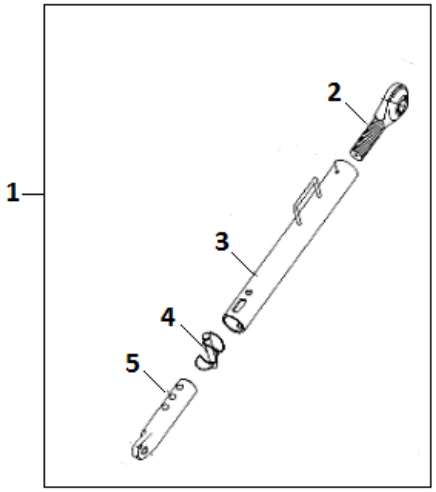

Description	Details	Part Number	Model	Refer to Number
Leveling Box	Kit	**054887T1**	400 Series	1
Leveling Box End	Top	**037682R1**	400 Series	2
Tube		055510R1	400 Series	3
Clip		037676R1	400 Series	4
Leveling Box End	Bottom	**039057R1**	400 Series	5

LOWER LINK

Description	Details	Part Number	Model	Picture
Ball	CAT I Lower Link	**886428M1**		
	CAT II Lower Link	**886429M1**		
Lower Link	LH / RH CAT I	**882698M92**		
	LH & RH	**1869289M91**	135 240	
	LH & RH	**886451M93**	100 200 LD	
	LH	**1660263M93**	200 HD	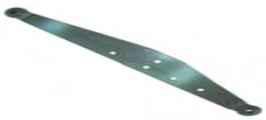
	RH	**1660262M93**	200 HD	

THREE POINT - LOWER LINK **...CONTINUED**

Description	Details	Part Number	Model	Refer to Number
Lower Link	LH	**060683T1**	400 Series	
	RH	**060682T1**	400 Series	
	Kit	**062895T1**	400 Series	
Lower Link Pin	Cat I Taper	**181229M1**	35	
	Cat II Taper	**893419M1**	65 165	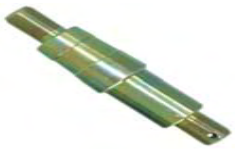
	Cat II Taper	**1867851M3**	135 240	
	Straight	**1867243M1**	188 200 300	

THREE POINT - LOWER LINK **...CONTINUED**

Description	Details	Part Number	Model	Refer to Number
Lower Link Pin	Lower Link	**1482939M1**	440	
Weld On End	CAT I	**P332**		
	CAT II	**P333**		
	CAT III	**P335H**		

STABILIZER

Description	Details	Part Number	Model	Picture
Clevis Pin	Check Chain	**195405M1**	100/200/300 Series	
Check Chain		**181354**		

THREE POINT - STABILIZER **...CONTINUED**

Description	Details	Part Number	Model	Refer to Number
Check Chain		**1861968**		
	CAT II 7 Chain	**1676196M91**		
	CAT II	**1865194M1**		
Stabilizer Chain	MF20-400	**1863260M93**	135 240	
	Long Nut	**S176**	165/188	
	MF20-402	**1661406M91** P3005	188 290 HD	
	MF20-401	**0011121U91**	100 200 LD	

THREE POINT - STABILIZER **...CONTINUED**

Description	Details	Part Number	Model	Refer to Number
Stabilizer Chain	Complete LH	**3146036M91**	440	
	Complete RH	**3146035M91**	440	
Stabilizer Pin		**52964M1**	100/200/300 Series	

TOP LINK

Description	Details	Part Number	Model	Refer to Number
Top Link	Cat I Short	**1870075M91** P70	35 135	
	Cat I Long	**1869954M91** P71	135 240	
	CAT I + II	**894376M91**	135/240	

THREE POINT - TOP LINK **...CONTINUED**

Description	Details	Part Number	Model	Refer to Number
Top Link	Cat I + II	**894377M91** P74	100 200 LD	
	Cat II	**893439M91**	100 200 300 LD	
	Cat II	**1660050M91** P275	100 200 300 400 HD	
		068483N1	440	
	Extra HD	**S3474**		
Top Link Pin	CAT I	**195589M1**		
		S198		

THREE POINT - TOP LINK **...CONTINUED**

Description	Details	Part Number	Model	Refer to Number
Top Link Pin	CAT I	**831513M1**		
	CAT II	**892476M1**		
	Heavy Duty CAT II	**3903840M1**		

WHEEL

BOLTS & NUTS

FRONT WHEEL

Description	Details	Part Number	Model	Picture
Bolt	5/8" x 18 Front & Rear	**3408246M1**	All Wheel	
Bolt	1/2" UNF x 35mm	**181328M1**	35/65/135	
Nut		**195490M1**	35/65 100/200/300 Series	

BOLTS & NUTS - FRONT WHEEL **...CONTINUED**

Description	Details	Part Number	Model	Refer to Number
Bolt	1/2" UNF x 25mm	**887135M1**	135/240/265	
Bolt	1/2" UNF x 44mm	**831420M1**	100/200/300 Series	
Nut		**195490M1**	35/65 100/200/300 Series	

REAR WHEEL

Description	Details	Part Number	Model	Picture
Bolt	5/8" x 18 Front & Rear	**3408246M1**	All Wheel	
Bolt	9/16" UNF x 50mm	**185400M1**	35/135/240	
Nut		**180004M1**	35/135/240	

BOLTS & NUTS - REAR WHEEL **...CONTINUED**

Description	Details	Part Number	Model	Refer to Number
Stud	5/8" UNF x 55mm	**893017M2**	65 100/200 Series	
Nut		**184273M1**	65 100/200 Series	
Nut		**881162M1**	65 100/200 Series	
Stud	11/16" x 60mm	**847416M1**	290/399	
Nut		**847417M1**	290/399	
Nut		**1872458M1**	290/399	

RIM TO DISC

Description	Details	Part Number	Model	Picture
Bolt	5/8" UNF x 72mm Rear Wheel	**828217M2**	100/200 Series	
Nut		**353427X1**	100/200 Series	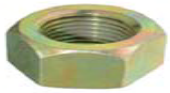

REAR RIM - LUX & STOP

Description	Details	Part Number	Model	Picture
Lux	Square	**898021M1** 3615259M2		
Lux	Oval	**3531377M1**		
Lux Bolt		**363296X1**		
Lux Bolt Nut		**375100X1**		

REAR RIM - LUX & STOP **...CONTINUED**

Description	Details	Part Number	Model	Refer to Number
Lux Bolt	Bolt Washer Nut	**363296X1 + 375100X1 + 353440X1 + 353762X1**		
Rail Stop		**898022M2**		
Rail Stop		**503676M1**		
Rail Stop Screw		**1751403M1**		

RIMS - FRONT

Description	Details	Part Number	Model	Picture
Rim	600 x 16 Tyre	1883335M2 **885741M1**		
Rim	750 x 16 Tyre	**1883333M92** 1691618M92 1693421M92		

RIMS - FRONT **...CONTINUED**

Description	Details	Part Number	Model	Refer to Number
Rim	900 x 16 Tyre	**1671829M91** ****MINIMUM ORDER = 250PCS**		
Rim	1000 x 16 Tyre	**1678319M91**		